VISVESVARAYA TECHNOLOGICAL UNIVERSITY

JNANA SANGAMA, BELAGAVI -590 018

A Major Project phase 2 Report on

Optimized LIF Neuron with memristor based Synapses and STDP Learning for Energy-Efficient Neuromorphic Systems

A Project work submitted in the partial fulfillment for the award of the degree

Bachelor of Engineering in Electronics and Communication Engineering

Submitted by

Sindhu Bai R	**1AY22EC096**
Surya M S	**1AY22EC105**
Monika H P	**1AY22EC055**
Pagadala Karunakar	**1AY22EC063**

Under the Guidance of
Dr. Asha C N
Associate Professor
Department of ECE

ACHARYA

2025-2026

DEPARTMENT OF ELECTRONICS AND COMMUNICATION ENGINEERING

Acharya Institute of Technology

Acharya Dr. Sarvepalli Radhadrishnan Road, Soladevanahalli, Bengaluru-560107

ACHARYA INSTITUTE OF TECHNOLOGY

Acharya Dr. Sarvepalli Radhakrishnan Road, Soladevanahalli, Bengaluru 560107

DEPARTMENT OF ELECTRONICS AND COMMUNICATION ENGINEERING.

CERTIFICATE

Certified that the Major Project Phase 2 entitled **" Optimised LIF Neuron with memristor based synapses and STDP learning for Energy-Efficient Neuromorphic systems "** is carried out by **Sindhu Bai R (1AY22EC096) , Surya M S (1AY22EC105), Monika H P (1AY22EC055) and Pagadala Karunakar (1AY22EC063)** in the partial fulfillment for the award of the degree of Bachelor of Engineering in Electronics and Communication Engineering of Visvesvaraya Technological University, Belagavi during the year **2025-2026**. It is certified that all corrections/suggestions indicated for the assessment have been incorporated in the report deposited in the departmental library. The Major Project Phase 2 Report has been approved as it satisfies the academic requirement in respect of Major Project Phase 2 (BECP786) prescribed for the Bachelor of Engineering Degree.

……	……	……
Signature of Guide	Signature of HOD	Signature of Principal
Dr. Asha C N	Dr. Rajeswari	Dr. C K Marigowda
Associate professor	Head of the Department	Principal, AIT
Dept of ECE, AIT	Dept of ECE, AIT	

Name of the Examiners **Signature with date**

1

2

DECLARATION

We the students of seventh semester Electronics and Communication Engineering, Acharya Institute of Technology, Soladevanhalli Bengaluru -560107 declare that work entitled " Optimised LIF Neuron with memristor based synapses and STDP learning for Energy-Efficient Neuromorphic systems " has been successfully completed under the guidance of Dr. Asha C N, Department of ECE, Acharya Institute of Technology, Bengaluru. This dissertation work is submitted to Visvesvaraya Technological University in partial fulfilment of the requirements for the award of Degree of Bachelor of Engineering in Electronics and Communication Engineering during the academic year 2025-2026. Further the matter embodied in the Major Project Phase 2 report has not been submitted previously by anybody for the award of any degree or diploma to any university.

Place: Bengaluru
Date:

Project Group:

Sindhu Bai R	**1AY22EC096**
Surya M S	**1AY22EC105**
Monika H P	**1AY22EC055**
Pagadala karunakar	**1AY22EC063**

ACKNOWLEDGEMENT

The satisfaction and euphoria that accompany the successful completion of a task would be incomplete without the mention of the people who made it possible and without their constant guidance and encouragement success would not have been possible.

I am grateful to the institute **Acharya Institute of Technology** for its ideas and inspiration for having provided us with the good infrastructure, laboratory, facilities, and inspiring staff which has made this Project Phase 2 successfully.

I would like to express my sincere gratitude to **Dr. C. K. Marigowda** Principal, AIT for all the facilities that has been extended by him throughout my work.

I heartily thank and express my sincere gratitude to **Dr. Rajeswari**, HOD, Dept. of ECE, AIT for her valuable support and a constant source of enthusiastic inspiration to steer us forward.

I would like to express my sincere gratitude to the Internal Guide **Dr. Asha C N,** Associate professor, Dept. of ECE, AIT for her invaluable guidance and support.

I would like to express my sincere gratitude to the Project Coordinators **Dr. Jayalaxmi H ,** Associate Professor and **Dr. Nikita Kar Chowdhury,** Assistant Professor, Dept. of ECE, AIT for their valuable guidance and support.

Finally, I would like to express my sincere gratitude to my parents, all teaching and non-teaching faculty members, and friends for their moral support, encouragement, and help throughout the completion of the Project.

Sindhu Bai R	**1AY22EC096**
Surya M S	**1AY22EC105**
Monika H P	**1AY22EC055**
Pagadala karunakar	**1AY22EC063**

ABSTRACT

Neuromorphic computing seeks to mimic the efficiency of biological neural systems by realizing spiking neurons together with adaptive synapses in hardware. This work is concerned with the design and validation of a low-power spiking neuron integrated with a memristor-based synapse to allow for neuromorphic computation. A custom Verilog-A model for a memristor is created and integrated into the CMOS neuron circuits for adaptive synaptic realization. A triple-memristor synapse was thereby connected between two neurons, which should allow robust weighted spike transmission with weight resolution enhancement.

STDP learning was applied to realize the on-chip synaptic potentiation and depression depending on spike timing. Transient simulations confirm stable neuron firing, dynamic weight adaptation, and convergence of learning without instability. The design has been validated through full pre- and post-layout simulations on 45 nm and 90 nm CMOS technology nodes. The design has also undergone physical verification analysis including DRC, LVS, and parasitic extraction. The proposed combined neuronal and synaptic circuit design consumes ultra-low power of about 11.74 nW at the 45 nm technology node, making it suitable for energy-limited edge and always-on implementations in a neuronal model.

TABLE OF CONTENTS

CHAPTER 1

Introduction……...……...…1-2

1.1 Background and Motivation……...…….…..…...……....3

1.2 Problem Statement and Objectives of project……..……3

1.3 Scope of the Work……...……..……...4

1.4 Significance of the Project…….....……..4

1.5 Technological Context……..……...……5

1.6 Relation to Prior Work…….....……...5

1.7 Outcomes of Project……..……...…6

CHAPTER 2

Literature Survey……...…….7-11

CHAPTER 3

Methodology and Implementation……...…….12-15

3.1 Simulation Environment and Setup…….15-17

3.2 Memristor Modeling and Symbol Creation……...……..…..……..17-19

3.3 Neuron Simulation and Optimization in 45 nm and 90 nm CMOS Technologies……..20-23

3.3.1 Step-by-Step Working of the Analog Spiking Neuron Circuit ……..……23-24

3.4 Integration of Triple-Memristor Synapse between Two Neurons……..……24-28

3.4.1 Step-by-Step Working of Triple Memristor Integration between two Neurons….28-29

3.5 Spike-Timing Dependent Plasticity (STDP) Learning Circuit …….....…29-31

3.5.1 Step-by-Step Working of the STDP Learning Circuit……..…..31-32

3.6 Pre-Layout and Post-layout for neuron in both 45nm and 90nm …….....33

3.6.1 Pre-layout verification……...……...…….……..33

3.6.2 Layout Implementation in 45 nm and 90 nm CMOS……33

3.6.3 Design Rule Check……...…….…..…33

3.6.4 Layout vs. Schematic…….....……34

3.6.5 Parasitic Extraction Using……..……34

3.6.6 Post-Layout Simulation and Configuration…….....34

3.6.7 Comparative Analysis Between 45 nm and 90 nm…….34-35

3.7 Design Parameter Optimization Strategy……...35-37

3.8 Technology Scaling Considerations……...37-38

CHAPTER 4

Results and Discussion……...…….....39-49

CHAPTER 5

Deliverables, Impact and Applications……..……50

5.1 Deliverables ……...……...…..…...50-41

5.2 Impact……..……...…….51-52

5.3 Applications…….……...52-55

CONCLUSION AND FUTURE SCOPE……..…….....56-57

REFERENCES

LIST OF FIGURES AND TABLE

Figure 1.1 : Neuromorphic brain-inspired neuron network illustrating the analogy between biological synapses and memristor-based electronic synaptic circuits…….2

Figure 3.1 : Neurons with Memristor and STDP Learning……...……...…….13

Figure 3.2 : Memristor Symbol created using Verilog-A...……..……..19

Figure 3.3 : Analog neuron schematic……..…….....21

Figure 3.4 : Analog neuron test circuit……..…….22

Figure 3.5 : Triple memristor synapse with neuron schematic……..…....27

Figure 3.6 : STDP learning schematic for potentiation and depression……..30

Figure 4.1 : Waveform of memristor……..…….....40

Figure 4.2 : Analog neuron transient response……..…….41

Figure 4.3 : Analog neuron transient response……..……41

Figure 4.4 : Transient response of triple-memristor as synapse between two neuron……...…….42

Figure 4.5 : Transient response of triple-memristor as synapse between two neuron…….....43

Figure 4.6 : STDP learning for potentiation……..……44

Figure 4.7 : STDP learning for depression……..……..45

Figure 4.8 : Analog neuron layout in 90nm…….....46

Figure 4.9 : Analog neuron layout in 45nm…….…….....46

Figure 4.10 : Analog av_extracted view in 90nm…….…….....47

Figure 4.11 : Analog av_extracted capacitors and resistors view in 90nm……47

Figure 4.12 : Analog av_extracted view in 45nm…….……48

Figure 4.13 : Analog av_extracted capacitors and resistors view in 45nm…….…..48

Table 4.1 : Comparison table of memristor as synapse between two neuron in 90nm and 45nm technology……..……....49

CHAPTER 1

INTRODUCTION

Neuromorphic engineering seeks to create hardware systems that can reproduce the low-power, event-driven behavior of biological neurons and synapses. In this work, a CMOS-based LIF neuron is implemented and optimized to achieve biologically realistic spiking dynamics with ultra-low power consumption. To enable adaptive learning, the neuron is integrated with a triple-memristor synapse featuring non-volatile, multi-level weight storage and supporting STDP. This enables the circuit to perform autonomous strengthening or weakening of synaptic connections depending on pre- and post-synaptic spike timings, closely mimicking natural neural learning mechanisms. The workflow for design includes schematic development, functional verification, and comprehensive performance analysis, which is followed by the creation of layout, DRC/LVS validation, and post-layout simulations to ensure that the circuit exhibits reliability under real-world parasitic conditions. In general, this work showcases a compact, energy-efficient neuromorphic building block capable of learning, intended for edge-AI, adaptive sensing, and other low-power computational systems.

Neuromorphic computing tries to emulate the style of information processing in the human brain with electronic circuits whose functionality directly mimics that of biological neurons and synapses as shown in figure 1.1. Unlike conventional digital processors, which operate by means of clocked and power-consuming logic, neuromorphic circuits operate with event-driven spike signals, thereby enabling very low power consumption and high parallel efficiency. In the frame of this perspective, the model of the Leaky Integrate-and-Fire neuron is widely preferred because it succeeds in capturing basic neuronal dynamics like membrane integration, leakage, and spike generation using simple CMOS circuitry.

This work targets the design and optimization of a CMOS-based LIF neuron that shows biologically inspired spiking behavior under ultra-low power operation, which is a key enabler for next-generation edge-AI and always-on sensing applications. The neuron is integrated with a triple-memristor synapse architecture in which each memristor can implement a programmable, non-volatile resistive element that stores synaptic weight. Employing three memristors enhances the stability, symmetry, and accessible weight levels compared with single-device synapses. STDP is a biologically observed mechanism where the strength of a synaptic connection changes according to the relative timing of pre-synaptic and post-synaptic spikes-the basis for on-chip learning in the synapse. By using carefully designed spike shapers, comparators, and memristor

update pulses, potentiation and depression occur autonomously in the system, allowing it to adapt its response without any external programming. This makes the circuit highly suitable for tasks such as pattern recognition, adaptive signal processing, and real-time anomaly detection.

The methodology involves schematic design, transient simulations, energy and frequency analysis, followed by layout implementation using standard CMOS design tools. Post-layout simulations, including parasitic extraction, are performed in order to confirm that the learning behavior, synaptic weight updates, and neuron firing characteristics remain consistent under realistic physical conditions. All these results together demonstrate a compact, low-power, and fully trainable neuromorphic building block that advances the implementation of hardware-based learning systems.

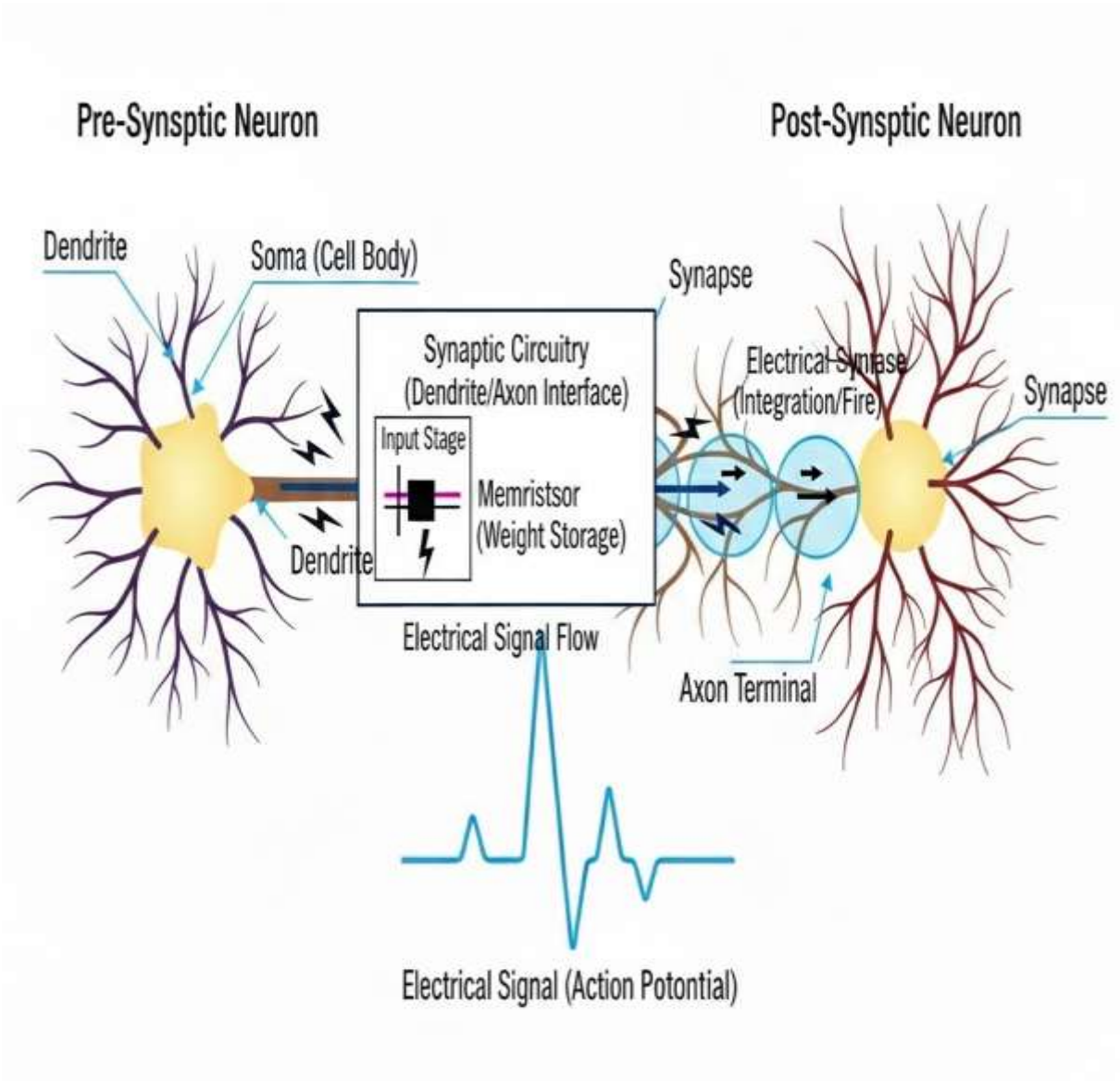

Figure 1.1 : Neuromorphic brain-inspired neuron network illustrating the analogy between biological synapses and memristor-based electronic synaptic circuits.

1.1 Background and Motivation

Biological neural systems perform information processing with unprecedented efficiency, adaptability, and robustness, which inspires the development of neuromorphic circuits that mimic these principles in hardware. Traditional von Neumann architectures struggle with power consumption, memory bottlenecks, and scalability when performing neural computations, especially in real-time or edge environments. This gap has increased the demand for analog and mixed-signal neuromorphic circuits that can offer low power, event-driven operation, and inherent parallelism.

The LIF neuron model represents one of the most efficient ways of modeling biological neuronal behavior using minimal CMOS circuitry. However, for a neuron system to be considered truly intelligent, it must be able to learn in the form of synaptic weight adaptation based on experience. Memristors hold the potential by naturally acting as non-volatile, analog, and compact synaptic elements that store weight values with very low power and area overhead.

STDP introduces a biologically plausible learning process, wherein synaptic strength dynamically evolves according to the timing difference between pre- and post-synaptic spikes. Incorporating STDP into memristor-based synapses will allow efficient on-chip learning with no need for digital memory or complex computation.

The motivation for this project is to design an energy-efficient neuromorphic circuit that combines:

- An Optimized CMOS LIF Neuron for Realistic Spiking Dynamics
- A triple-memristor synapse for stable and fine-grained weight storage, and
- STDP learning for autonomous synaptic adaptation.

This can be used as a building block for edge-AI processors, smart sensors, biomedical devices, and any applications that require real-time learning with ultra-low power consumption. The goal is to not only achieve biological realism but also practical implementability via layout design and post-layout performance validation.

1.2 Problem Statement and Objectives of project

Problem Statement : Optimized LIF Neuron with memristor based Synapses and STDP Learning for Energy-Efficient Neuromorphic Systems .

Objectives : 1) To simulate an optimized LIF neuron circuit in CMOS technology, ensuring low power consumption and biologically inspired spiking dynamics.

2) Validate the performance analysis of LIF neuron with memristor based Synapses, STDP Learning and layout & post-layout verification.

1.3 Scope of the Work

- This work will involve the design, simulation, and validation of an energy-efficient neuromorphic circuit consisting of a CMOS LIF neuron integrated with a triple-memristor synapse supporting STDP learning.
- The work will be initiated by modeling and optimizing the neuron circuit to guarantee biologically realistic spiking dynamics with the minimum possible power consumption. It will extend to the development of a memristor-based synapse that is capable of storing analog weight levels and updating them through spike-timing-dependent learning rules.
- The project will also involve the design of spike-shaping circuits, the implementation of learning control signals, and the verification of potentiation/depression behavior using transient simulations.
- The full layout implementation of the neuron-synapse system includes DRC/LVS correctness and post-layout simulation to confirm its performance under parasitic conditions. Results obtained from both schematic and extracted levels will be compared in order to get an analysis of robustness, stability, and energy efficiency.
- The final scope involves documentation of results, identification of practical applications, and evaluation of the potential of the proposed circuit for real-time neuromorphic and edge-AI systems.

1.4 Significance of the Project

- This work represents a significant development in low-power neuromorphic circuit , with key technical and practical contributions.
- The implementation of the optimized CMOS LIF neuron with a triple-memristor synapse, together realizing biological spiking with minimum power consumption that is suitable for next-generation intelligent electronics.
- The STDP learning capability enables dynamic on-chip self-adaptation without off-chip processing elements or digital memory, which significantly reduces computational burdens.
- The project's focus on complete schematic design, layout implementation, and post-layout validation ensures the manufacturability and reliability of the proposed circuit under true hardware constraints, rather than a purely theoretical exercise. Applications to edge-AI sensors, biomedical devices, and real-time pattern recognition make the proposed design a very promising foundation for neuromorphic systems that could be truly scalable.

- In general, the project tries to bridge the gap between biological mechanisms of learning and practical silicon-based implementations, enabling more efficient computing architectures inspired by the brain.
- The ultra-low power operation achieved in this design holds especial significance in battery-operated and always-on systems, for which energy efficiency is of prime importance.
- This work validates the circuit at both the schematic and post-layout levels, thus providing solid grounds for future chip-level implementations and offers a pathway to truly scalable neuromorphic processors capable of autonomous operation at the edge.

1.5 Technological Context

- Neuromorphic engineering has emerged as an essential technological pathway in the design of computing systems inspired by the efficiency and flexibility of the human brain.
- Inherent limitations, including high power consumption, memory–compute bottlenecks, and reduced scalability for real-time sensory and learning tasks, affect traditional digital processors.
- In this realm, CMOS-based LIF neurons have become a practical hardware model owing to their simplicity, robustness, and the ability to mimic biological neural behavior.
- Parallel to this, memristor technology has also developed as one of the promising solutions for synaptic implementation, which can provide non-volatile, analog, and compact weight storage. Memristors integrated with CMOS circuits allow learning capabilities at the hardware level, mainly when implemented with mechanisms like STDP.
- Recent trends in technology point to ultra-low-power edge computing, autonomous learning systems, and scalable neuromorphic architectures for various applications in IoT, robotics, biomedical electronics, and pattern recognition.
- This project positions itself in this evolving landscape by combining optimized CMOS neuron circuits, triple-memristor synapses, and STDP learning into an energy-efficient neuromorphic building block suitable for next-generation intelligent systems.
- This work is placed within the new paradigm after Moore's Law, specifically within computing, where the topic involves energy-frugal, event-based, or neuromorphic computing hardware explored along the line orthogonal to traditional AI computing accelerators. This work is pertinent in its alignment with existing trends.

1.6 Relation to Prior Work

- Previous neuromorphic hardware has explored different neuron and synapse implementations, including Axon Hillock–based spiking circuits, CMOS LIF neurons, and memristor-enabled synaptic learning.

- The previously reported Axon Hillock neuron circuits, such as the 28 nm FD-SOI design, were compact and fast-spiking but did not have synaptic adaptability and on-chip learning capability.
- Other studies looked at CMOS LIF neurons combined with memristive STDP synapses, which achieved weight modification but mostly used single memristor devices that suffered from instability, limited resolution, and nonlinear learning curves.
- More recent literature has focused on mixed-signal neuromorphic systems and programmable synapses, but many of those designs either consume higher power, rely on large digital control blocks, or do not address post-layout accuracy needed for real hardware deployment.
- Compared to them, this work integrates an optimized CMOS LIF neuron with a triple-memristor synapse, which offers better weight stability, symmetry in potentiation/depression, and increased resolution for learning states.
- Unlike previous work, this study also performs complete schematic, layout, and post-layout validation, giving a more accurate estimation of manufacturability and performance.
- Thus, the proposed design improves upon previous work by providing a low-power, learning-capable neuromorphic building block whose layout has been verified for use in scalable edge-AI systems.

1.7 Outcomes of Project

- The transient simulation results showed that the optimized CMOS LIF neuron performed well with biological spike dynamics. Low-power performance was ensured using 45nm and 90nm CMOS technology. The performance results verify that the designed model is appropriate for ultra-low-power neuromorphic computing.
- The optimized CMOS LIF neuron with triple-memristor as synapses between two neurons consumed ultra-low power, about 11.74 nW, in 45nm technology. STDP learning rules allowed for effective adaptative weight control between neurons. Pre- and post-layout simulations of the neuron block, including layout-extracted, confirmed correct spiking behavior and reliable operation after physical implementation.

CHAPTER 2

LITERATURE SURVEY

Sasi Kiran Suddarsi et al. (2025) , designed and analyzed Axon Hillock neuron circuits using 28 nm FD-SOI MOSFET technology. This technology targets high-speed, low-leakage neuromorphic operation. Various architectural modifications of the AH neuron were explored. These developments improved firing stability by reducing threshold mismatch. Better electrostatic control was achieved because of FD-SOI, leading to a reduction in power consumption and improvement in frequency characteristics. These circuits are suitable for modeling biological spiking behavior but remain focused only on optimization at the neuron level.However, synaptic learning and memristor-based adaptation are not applied in this design. This fact severely limits the relevance of the work to VLSI neuromorphic networks of a larger scale. Noise sensitivity, lack of weight storage, and inability for online learning remain unresolved. The work is important for neuron modeling but requires further steps in an adaptive synapse and full network architectures toward practical scalability [1].

A.Dabbagh et al. (2025), proposed CDMAC, a mixed-signal binary/ternary in-memory computing accelerator for power-constrained MAC operations. The authors' architecture leverages in-memory computing principles, thereby reducing data movement and significantly lowering energy per operation. The system can support both binary and ternary weight states and can be used for edge-AI applications where low power and compact hardware are required. By integrating analog and digital processing, CDMAC manages to achieve high throughput with much improved performance for inference workloads. While efficient, this design is still bound by the constrained precision from binary/ternary weights that might be limiting for more complicated learning tasks. Analog peripheral circuits easily become sensitive to noise and typically require careful tuning to maintain their accuracy. Scalability to very large arrays will probably challenge these devices due to parasitic effects and device non-uniformity. In any case, this work represents a strong step forward regarding low-power neuromorphic accelerators [2].

Karamimanesh et al. (2025), presented a comprehensive survey of spiking neural network implementations on FPGA platforms, with a focus on architectural choices, learning methodologies, and recent advances in hardware accelerations. This work showed how FPGAs can achieve rapid prototyping and reconfigurable SNN architectures that are well-suited for real-time applications. However, FPGA-based solutions are heavily dependent on digital logic and clocked operations, which concludes that power consumption is higher and biological realism is lower when compared to analog or mixed-signal neuromorphic circuits. The scalability and

flexibility of such surveyed approaches are emphasized; however, ultra-low-power operation is identified as a challenging limitation. This thereby reinforces the motivation for CMOS-based analog neuron and memristor synapse designs that can operate in the nanowatt regime for always-on neuromorphic systems [3].

Sahibia Kaur Vohra et al. (2024) Vohra et al. present a CMOS-based trainable spiking neural network that incorporates LIF neurons with memristive STDP synapses, thus providing hardware-level learning. Their system successfully showed real-time potentiation and depression by the precise timing of pre- and post-synaptic spikes, proving the efficiency of analog learning circuits. The hybrid CMOS–memristor implementation reduced the digital overhead while simplifying weight updates, which made this architecture energy-efficient and biologically relevant.However, the design has its limitations, such as memristor nonlinearities, cycle-to-cycle variability, and a need for stable programming pulses. Scaling to large network sizes is problematic due to drift, mismatch, and array-level IR-drop effects. The architecture is quite good for adaptive SNNs, but synapse stability must be improved, high endurance devices are needed, and optimization of the peripheral circuits is required before it can see real-world applications [4].

F. Aguirre et al. (2024) , proposed the hardware realization of a memristor-based artificial neural network. It demonstrated a realistic path to dense and energy-efficient neuromorphic systems. Their design is based on programmable memristive devices as synaptic elements that store weight analogs and perform in-situ learning. It was proved that large-scale neural computations could be accomplished with an area and power much lower than digital-only counterparts. The integration of memristors with CMOS circuitry introduced high parallelism and increased the capability of the architecture for inference.These challenges include device variability, nonlinear switching characteristics, and endurance limitations, affecting long-term learning reliability. The system also relies on careful calibration to mitigate drift and noise in analog operations. Highly promising, the work underlines the need for more stable memristor models and more robust integration techniques for practical neuromorphic deployment [5].

J. Kim et al. (2024), proposed a 180 nm CMOS neuron circuit using a soft-reset and underflow mechanism for loss-less operation in hardware spiking neural networks. The proposed architecture prevents undesirable residual charge and ensures an appropriate reset of the membrane after each spike . It enhances the precision of spike timing , thus reducing the cumulative error from long-term operation and making the design appropriate for stable SNN implementations. The circuit shows reliable spiking behavior with moderate power consumption, thus enabling the use of conventional CMOS processes and facilitating large-scale integration. However, it only uses pure CMOS circuitry in its design, without integrating memristive or non-

volatile synaptic elements; this seriously limits its capability for on-chip learning. The absence of any STDP or adaptive weight mechanisms makes the architecture more suitable for inference rather than real-time learning. Furthermore, the relatively older 180 nm node is bound to be less area-efficient compared with state-of-the-art deep-submicron technologies. While quite effective for robust neuron operation, further enhancements would be required toward advanced neuromorphic learning systems [6].

Pedersen et al. (2024), presented a neuromorphic IR acting as a common instruction set to allow interoperability among various neuromorphic platforms. The work intends to overcome one of the largest bottlenecks in neuromorphic system development due to a wide variation in neuron models, synaptic learning rules, or hardware abstractions, which makes portability between simulators and physical implementations difficult. They provide interoperable primitives for neurons, synapses, or spike-based operations using NIR framework level compilation and execution of SNNs across heterogeneous neuromorphic platforms. However, the work targeted system-level abstraction and software–hardware co-design only, and does not consider any circuit-level realization of neurons or synapses. More precisely, power consumption, device variability, and analog non-idealities in CMOS–memristive circuits are not considered explicitly, which leaves rooms for complementary low-power circuit-level works [7].

J. Ko et al. (2024), examine the simulation of large-scale analog spiking neural networks (SNNs) using a new simulation platform named SNNSim, emphasizing hardware-level optimization with analog synaptic devices such as those in flash memory elements. The study particularly aims to effectively simulate device and network models in order to promptly assess a set of specific parameters such as area, performance, latency, and accuracy to efficiently explore hardware designs in large-scale biologically-inspired neuromorphic computing applications. Noticeably, the SNNSim platform simulates datasets much faster than standard general-purpose circuit simulators such as SPICE, thus aiding in rapid hardware-level optimization of network performance factors in artificial intelligence models ([doaj.org][1]). The study is more of a hardware optimization platform than a hardware architecture but is meaningful in recognizing the hardware simulation complexity involved in deploying large-scale analog-based spiking neural networks with nonvolatile synaptic devices [8].

J. K. Eshraghian et al. (2023), Eshraghian et al. have shown a state-of-the-art training of SNNs by adapting principles from deep neural networks, including surrogate gradient methods and backpropagation-like algorithms. The work greatly improves the trainability and improves the accuracy performance of SNNs, achieving a better bridge between biologically inspired computation and performance of machine learning. The work progresses learning theory and the

progress in algorithmic frameworks but employs ideal neuron and synapse models and does not formally consider hardware constraints such as device mismatch, limited dynamic range, or parasitic effects. Furthermore, the implementation focus is set to software and algorithmic levels, hence leaving open challenges with respect to energy-efficient hardware realization of on-chip learning by means of analog CMOS and memristive synapses [9].

Wang et al. (2023), explored memristor-based intelligent human-like neural computing, focusing on the application of memristive devices for simulating biological synapse models for neuromorphing architectures. This work clearly showed that nonvolatile memristive devices can be effectively utilized for realizing synaptic weight representation as well as learning and memory in compact system architectures by fully utilizing their analog conductance modulation capability for better energy efficiency with an emphasis on reduced complexity as in CMOS-based architectures. Nevertheless, their work is more inclined towards device-system models without deeper discussions or focuses on CMOS-based neural cell design implementation or their post-layout analysis. Therefore, research challenges still exist for integrating memristive devices with CMOS-based neurons concerning their parasitic properties and effective low-power design considerations at the circuit implementation level [10].

Vuppunuthala and Pasupureddi (2023), describe a highly energy-efficient silicon neuron realized in 65nm CMOS, featuring 3.6 pJ per spike and 30 Hz operation with a 0.5-V supply voltage. This design exhibits strong low-voltage design philosophies aimed at a minimal dynamic energy and a minimal static energy. The publication delivers useful insights into how to reduce the energy of a spike (by device biasing, reset circuits, and accurate spike timing control) from a circuit perspective; it also delivers experimental results making it more applicable. This publication does not cover the application of efficient intra-chip synaptic plasticity mechanisms nor neuromorphic circuits operating with memristor devices but rather focuses on a relatively low data rate of 30 Hz. It also does not cover the efficient integration with memristor devices. This publication complements the efficiency of our work regarding the integration of a memristor device with STDP, but it still does not address how highly efficient silicon neurons designed for low energy operation could be combined with memristor devices for efficient neuromorphic computing [11].

Ambrogio, Narayanan & Tsai (2022), proposed a hybrid CMOS-RRAM mixed-signal convolutional neural network that leveraged compute-in-memory operation for large-scale neuromorphic accelerations. This work had brought a substantial gain in energy efficiency due to the reduction of data movement and direct integration of analog synaptic arrays with neuron circuits. The architecture showed high throughput and was more suited for inference tasks and

edge-level AI acceleration. Besides, RRAM synapses were capable of offering weight storage in high density with multi-level programmability. But RRAM devices face issues like limited endurance, retention failure, and stochastic switching behavior that affect the long-term stability of the device. Greater peripheral ADC/DAC requirements add complexity to the system and increase total power consumption. Material compatibility issues make integration with standard CMOS flows non-trivial. While promising, major reliability improvements in design are needed for full neuromorphic deployment [12].

Yang, Han, Huang & Ye (2022) , proposed a CMOS analog implementation of LIF and STDP circuits, intended for low-power spiking neural networks with behavior inspired by biology. Their proposed design can realize continuous-time STDP learning without any digital intervention, where synaptic weights may evolve due to spike timing. Their analog design allows for low power consumption, fitting the requirements of edge-AI applications. However, excluding weight storage based on memristors adversely affects the density and non-volatility of synaptic weights, making long-term learning impractical. Analog components of capacitors and current mirrors are prone to mismatch and hence require careful calibration. Area overhead and analog drift make it problematic to realize large-scale networks. Though effective for concept demonstration, further improvements remain necessary for dense neuromorphic hardware integration [13].

J.-Q. Yang, Y. Zhu (2020), A thorough review of neuromorphic engineering by Yang et al. is given that spans the development from biologically inspired models of the brain to neuromorphic systems based on spiking models. A detailed review of models of biological neurons, models of synaptic plasticity, and nonvolatile memory technologies such as memristors has been included that are aimed at neuromorphic computing. The work indicates the capabilities of spiking models of computation that are event-driven and provide possibilities of high energy efficiency compared to the digital AI accelerators of the current state of the art. Although the current work is helpful towards gaining an understanding of the entire range of materials and technologies available for neuromorphism, the comprehensive assessment of the entire neuromorphic circuits working on the principles of biological neurons and synapses within CMOS is not provided [14].

CHAPTER 3

METHODOLOGY AND IMPLEMENTATION

The project focuses on the design, simulation, and validation of an ultra-low-power neuromorphic circuit that integrates an analog spiking neuron with a triple-memristor synapse capable of on-chip learning. The challenge is to realize biologically similar neural behavior in silicon, with very low power consumption, for edge-AI and real-time learning applications. The core design will include a spiking neuron implemented in CMOS, featuring biologically inspired integrate-and-fire (IF) dynamics. The synaptic connection between two such neurons will be implemented using a triple-memristor configuration, which, as suggested, enables stable, multi-level, and non-volatile synaptic weight storage. This allows the circuit to reproduce both neuronal spiking and synaptic plasticity, the two quintessential functionalities of natural neural systems.

Each memristor was implemented with a compact Verilog-A behavioural model that captures its nonlinear I-V characteristics, state-dependent resistance, and voltage-controlled conductance modulation to model realistic and programmable synaptic behaviour. Employing three instead of a single device increases linearity, improves weight granularity, and significantly reduces the update asymmetry during learning. The internal state of each memristor evolves according to applied voltages, enabling the precise potentiation or depression of synaptic weights. This constitutes the basic structure of the adaptive synapse between pre- and postsynaptic neurons.

The learning mechanism follows a biologically grounded rule, STDP, wherein synaptic weights change according to the relative timing between pre- and post-synaptic spikes as shown in figure 3.1. This includes spike-shaping stages and a learning controller capable of producing differential update pulses that encode Δt between spikes, thus allowing for autonomous weight updates. This results in a purely analog, on-chip learning system with no digital memory or off-chip computation involved. STDP is successfully implemented at the device level, showing an important step toward self-learning neuromorphic processors.

Functional and performance simulations were conducted at the 45 nm CMOS technology node to characterize the target behavior under ideal and energy-efficient conditions. The results showed extremely low power consumption of 11.74 nW and energy per spike of 244.3 fJ in 45nm confirming that the design is suitable for ultra-low-power operational domains. These results point out the efficiency of the analog neuron and the stability of the memristive synapse when integrated together. For ensuring manufacturability and physical feasibility, layout design, DRC/LVS verification , and parasitic-extracted simulations were carried out using a 90 nm and

45 nm CMOS technology node. The selection of this node was based on the availability of the process and tool for physical design validation. Full parasitic extraction-including resistance and capacitance-of post-layout simulations makes possible the measurement of realistic effects like increased delay, pulse distortion, synaptic current deviation, and extra dynamic energy consumption.

This two-node approach 45 nm and 90 nm for benchmarking ideal schematic performance, also in 45 nm and 90 nm for layout-level verification-provides a balanced view of real-world efficiency predictions with practical hardware implementation limitations. The overall workflow demonstrates a full neuromorphic design cycle: behavioral modeling, schematic design, learning algorithm integration, performance evaluation, physical layout, and post-layout verification.

Importantly, the project validates that the proposed triple-memristor synapse and analog neuron system maintains functional integrity even in the presence of parasitic effects and layout-induced variations. This positions the design as a strong candidate for future edge-AI systems, low-power sensory processors, and embedded neuromorphic chips.

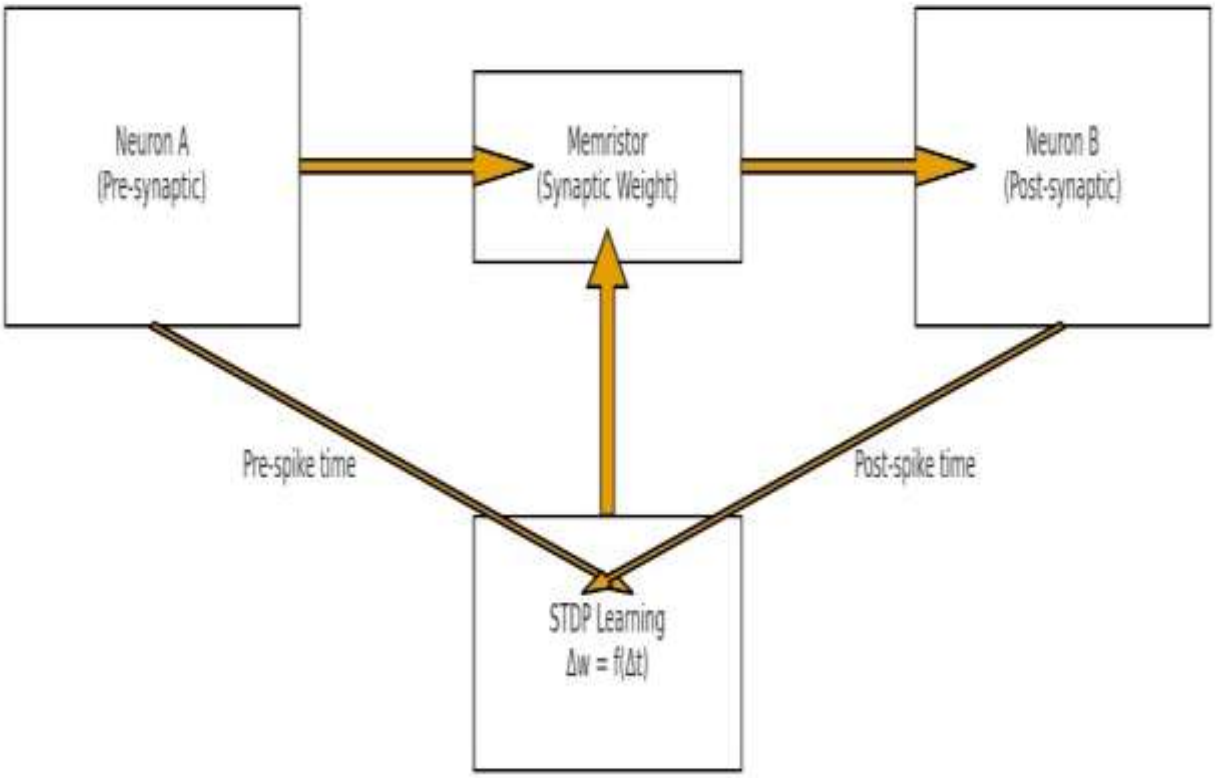

Figure 3.1 : Neurons with Memristor and STDP Learning

One of the critical motivations of this design is to develop hardware-level intelligence that can run in an environment where digital processors are either too power-hungry or too slow.

Neuromorphic circuits modeled in analog/mixed-signal CMOS are an attractive solution due to the inherent support of continuous-time dynamics and event-driven operation similar to biological neurons. While the information processing in a digital neural network involves massive memory access and computation, the analog spiking neurons perform it via natural physics from capacitors, transistors, and memristive elements. It allows for drastically reduced power consumptions while retaining computational richness. The proposed system combines a CMOS spiking neuron with a triple-memristor synapse to bridge the gap between biological efficiency and silicon implementability.

The use of triple memristors is a strategic design choice. Single memristor synapses have nonlinear weight evolution, limited dynamic range, and are highly sensitive to process variations. A configuration with three devices provides greater control over synaptic weight symmetry and fine-resolution analog states. It also brings better stability of writing during STDP updates. This balancing of charge flow during learning reduces drift and thus has the added benefit of long-term synaptic weight retention. Therefore, the synapse more accurately mimics biological strength modulation, all while making sure predictability in silicon is ensured. This improves both reliability and the consistency of learning across repeated cycles.

This neuromorphic neuron works in the subthreshold or near-threshold region of CMOS transistors, enabling exponential I-V behavior that naturally reproduces biological membrane dynamics. It is highly energy-efficient, allowing nano-watt power-level operation for this neuron-a necessary feature of dense, large-scale neuromorphic systems. The analog membrane capacitor integrates the arriving synaptic current until a threshold is crossed; the circuit then generates a spike and resets. Careful tuning of bias currents, leak parameters, and threshold circuitry have enabled the neuron to achieve stable oscillatory firing while retaining strong biological fidelity. Compatibility with the memristive synapse enables seamless integration within STDP learning.

The presence of Spike-Timing Dependent Plasticity (STDP) at the learning side provides the core for the self-adaptive mechanism. In biological neural circuits, STDP describes the process wherein a synapse is strengthened when it detects a causal spike order-a pre-synaptic spike precedes a post-synaptic spike-and weakened otherwise. This timing-based rule is crucial for pattern recognition, associative memory, and unsupervised learning. This STDP block utilizes RC-based spike shapers and a differential comparator to find timing relations and then generate update pulses.

These pulses, coupled with the voltage-controlled dynamics at the memristors, allow for real-time, fully analog weight adjustments, without any algorithmic computation. Analog local learning is much more energy-efficient compared to digital updates used for conventional neural

accelerators. From a hardware engineering perspective, it is important to validate both schematic-level behavior and physical layout implementation. While 45 nm technology offers excellent performance and efficiency predictions, having a complete 45 nm and 90 nm PDK for layout ensures that the design can be validated with full parasitic effects. Layout parasitics have a significant impact on the performance of analog neuromorphic circuits, especially the shape of spikes, the time constants of membrane dynamics, and the precision of weight updates. Using post-layout simulations, the project guarantees that the circuit can still function after introducing realistic delays, routing capacitances, and resistance elements. This all leads to a much more trustworthy evaluation of how the circuit might behave on silicon.

The dual-process-node methodology also supports an important research purpose. A majority of neuromorphic studies publish results with ideal simulations, without verifying layout feasibility. In contrast, this work defines a workflow that decouples ideal performance exploration in 45 nm and physical hardware validation in 90 nm. The outcome of such a workflow is a complete design chain from conceptual model to silicon ready layout, crucial for the practical development of neuromorphic ICs. Moreover, the comparison between schematic and post-layout results shows how parasitics impact learning speed, firing rate, and overall energy consumption-all information usually missing in neuromorphic works.

Finally, the proposed neuromorphic block is highly modular and scalable. Individual neuron–synapse pairs can be arranged into columns, layers, or recurrent loops. Since the power consumption per synapse–neuron pair is within the nano-watt range, thousands of such blocks can be integrated on a single chip while still remaining within the power budget of edge devices. This makes the design highly relevant for real-world applications such as always-on sensing, adaptive IoT devices, low-power robotics, and biomedical implants. From this perspective, the combination of low power with on-chip learning and layout-verified performance makes this neuromorphic block a strong candidate for next-generation adaptive hardware.

3.1 Simulation Environment and Setup

1. CAD Software and the CAD Platform

All the design and simulation works were done with the help of Cadence Virtuoso Analog Design Environment, a powerful platform for neuromorphic mixed-signal and analog circuit design. The schematic capture phase of the design process was done with the help of the Virtuoso Schematic Editor tool of the IDE platform. Behavioral modeling of the memristor components was done using the Verilog-A language supported by the platform. The Spectre simulator has been used for transient and parametric simulations owing to its ability to accurately simulate analog and mixed-

signal designs. For physical verification, layout tools provided by Cadence, along with Quantus, were used for parasitic extraction.

This allowed designs to be verified within a single ecosystem, which reduced compatibility problems for different simulation stages. There were separate design libraries for 45 nm and 90 nm CMOS processes to facilitate a direct comparison of performance and functionalities of different nodes. The design models for different processes and simulator corner conditions were chosen with great care to ensure realistic results.

2 . Analysis Types and Simulation Modes

The main method adopted all through this project was transient simulation. The reason behind this choice was that spiking circuits are time-domain dominant processes such as spikes, integrate-and-fire, and learning. By transient simulation, it was possible to analyze membrane potential, weight updates, and interaction of spikes.

Apart from the transient analysis, the DC operating point analysis was also performed to ensure the correctness of bias conditions and the initial values prior to the time domain analyses. It assured that all the analog blocks were working within their respective specified regions. Depending upon the requirement, the parametric sweep analyses were performed.

The post-layout simulations were also carried out using the netlist, and their impact on transient behavior has been examined. The simulation proved that functionality achieved at a schematic level was retained at a physical level.

3. Stimulus Generation and Input Modeling

The input stimulations were engineered to be as close to the natural neural activity in living organisms as possible. Current pulses to the neuron input simulated the synoptic excitation, while voltage spikes served to induce learning behavior in the STDP circuit. The pulse width and rate were carefully adjusted to control the neuronal activity without forcing the circuit.

For evaluating the synaptic learning, pre-synaptic and post-synaptic spiking activity with a known timing difference was provided. It helped in the validation of the potentiation and depression patterns for different timing conditions. Several cycles of the learning process were simulated to analyze the long-term characteristics.

The sources of stimulus were parameterized to facilitate repeated experiments and flexibility during optimization. Parameterizing helped organize experiments, promoting consistency among runs and efficient comparisons among design parameters.

4. Convergence, Accuracy, and Stability Options

In order to properly monitor the accuracy of the transient phenomena and the evolution processes in the states of the memristors, high convergence accuracy was ensured while simulating the processes. This was important in setting the maximum simulation time step, which was limited by the nature of the transitions during the learning processes. This was the case while using the Verilog-A models.

The value of relative tolerance (reltol) and absolute tolerance (abstol) parameters of tolerance was tuned. It ensured the convergence of the simulation results. To ensure successful weight updation, conservative tolerance values were used during the simulation of the learning process. Handling of the initial conditions of the simulation process also used the required settings.

Simulations with long durations were performed to check the stability during long simulations and confirmed that there was neither drift nor divergence in the firing of the neuron and the synaptic learning.

5. Configuration Management and View Selection

The use of configuration views was extensive in handling simulation configurations with both schematically and extracted netlists. Different configurations were developed based on whether simulations involved pre-layout or post-layout, av_extracted, thus allowing easy transition from simulation with ideal models to simulation with parasitic models. The configuration environment also supported the inclusion of Verilog-A models, technology libraries, and parasitics.

This ensured that all simulations were done under well-controlled conditions. Consistency in versions was maintained throughout the project to eliminate any variations in results. On the whole, the structured simulation framework and setup were very important elements of the validation of the neuromorphic chips on various abstraction levels. It helped guarantee the correct evaluation of performance parameters such as power consumption, energy, spiking activity, and learning convergence.

3.2 Memristor Modeling and Symbol Creation (Verilog - A Implementation)

For synaptic functionality, a behavioral memristor model was implemented in Verilog-A and integrated into the Cadence Virtuoso environment. Instead of a general abstract mathematical description here in the report, the project leveraged an already existing well-tested Verilog-A module attached in the code appendix supporting multiple memristive models and windowing types as shown in figure 3.2 . It provides a pragmatic, tunable device primitive, capturing the key

memristive behaviors relevant to circuit-level STDP experiments, including bidirectional conductance updates, hysteresis, threshold bounded switching, and tunable dynamic response.

The implementation of Verilog-A allows the selection of different device models, namely linear ion drift, Simmons tunnel barrier, TEAM, nonlinear ion drift, and VTEAM, including several window functions to control device edge behavior . Practical parameters that are exposed by the module include initial state, minimum/maximum resistance bounds, write thresholds, update rate constants, and numerical timesteps. It is possible, within this framework, to tailor the device to match different memristive technologies or to explore different write/update dynamics during simulations.

Finally, the code provides an optional diagnostic terminal to report the device's internal state for convenient waveform inspection. Implementation steps in Virtuoso followed the standard flow: the Verilog-A source was compiled in the ADE environment and instantiated as a simulation primitive. In the Virtuoso Schematic Editor, a custom schematic symbol was created containing two electrical pins (the device terminals) and one auxiliary pin for monitoring internal state. It was parameterized such that model selection and behavioral parameters can be set directly on each schematic instance without changing the Verilog-A source. This makes for easy experimentation with various types of memristors and operating points across multiple synapses.

The primitive was validated standalone before integrating into the full synapse: voltage-pulse and DC bias simulations verified expected switching behavior, hysteresis loops, state-dependence, and write/read stability. The time-step control and transient convergence settings had to be carefully tuned to ensure the simulation was robust under rapid write pulses. Observing device evolution during potentiation/depression cycles with the diagnostic state pin and waveform probes confirmed that the model produced smooth repeatable updates, rather than abrupt or non-physical jumps.

Once the memristor symbol was validated, it was used to build the triple-memristor synapse schematic. Instances were connected with appropriate switching/control nodes to support read and write phases and to enable gated updates during STDP events. Care was taken while constructing the schematic to separate read and write paths in order to prevent inadvertent changes in the weights during normal neuron operation.

Some practical modelling notes: for transient analysis, use a conservative maximum time step to capture fast write dynamics reliably; run parameter sweeps to find stable programming pulses; and perform Monte-Carlo runs to provide a study of sensitivity to device parameter variation. Such tasks are greatly simplified by the modular nature of the Verilog-A primitive ; the mapping

between model parameter choices and observed circuit behaviour is straightforward. In summary, this project utilized a flexible, production-grade Verilog-A memristor module as a realistic synaptic device throughout. It was easy to instantiate, configure, and test the memristor by creating a parameterized symbol in Virtuoso, thus setting a good foundation for the triple-memristor synapse and subsequent STDP learning experiments described in later chapters.

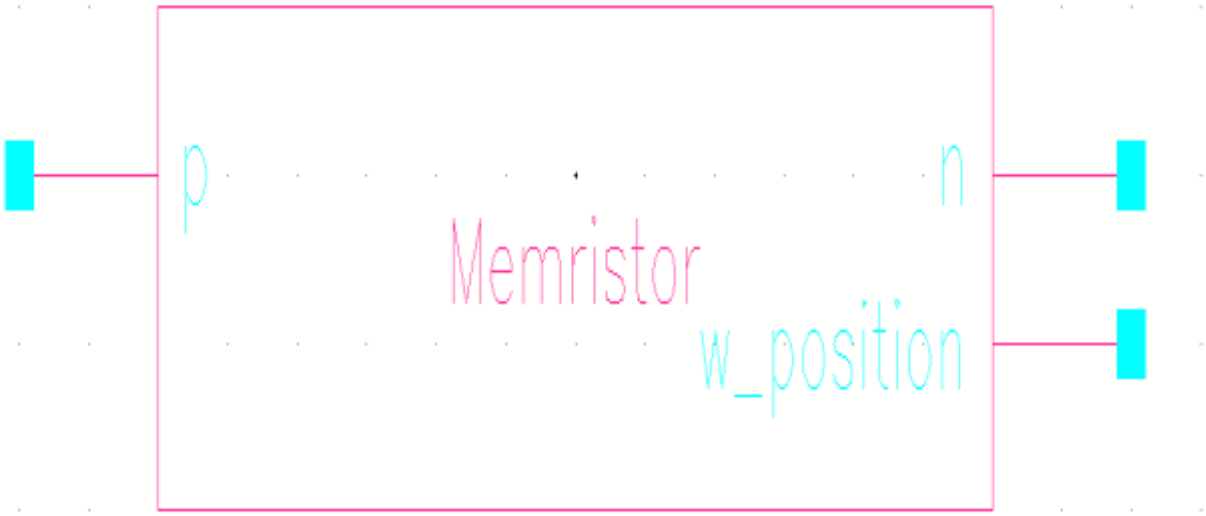

Figure 3.2 : . Memristor Symbol created using Verilog-A

This approach, based on Verilog-A, has several advantages:

1. It allows for full customization of memristor behavior to match different material technologies.
2. Real-time state evolution is provided during circuit simulations, thus allowing for accurate STDP learning analysis.
3. This ensures that the memristor can be used as a symbolic component across any schematic in Virtuoso.
4. It enables sweeps of parameters, Monte Carlo simulations, and the integration of multiple devices, including triple-memristor structures.

Thus, creating the memristor symbol by using Verilog-A is an important initial step in the construction of the triple-memristor synapse and the realistic neuromorphic learning simulation to be done in later parts of the project.

3.3 Neuron Simulation and Optimization in 45 nm and 90 nm CMOS Technologies

The spiking neural network : A spiking neuron circuit was comprehensively simulated and optimized at the schematic level with the aim of lowering energy consumption while still maintaining biologically inspired spiking phenomena. This is an integrate-and-fire neuron, with currents from synapses accumulated at a membrane node until it reaches a threshold value, afterward spiking, then reset as shown in figure 3.3 . This was basically the core aim of this step: ensuring proper setting of the neuron with stability in firing, power efficiency, and compliance with memristive currents.

These initial simulations were conducted using 45nm CMOS technology with emphasis on ultra-low power for dense neuromorphic applications. Neuron model parameters such as membrane capacitance, leakage path strength, bias currents, and threshold voltages were explored using transient analysis for parametric optimization. Optimized parameters enabled the simulated neuron to spike at a frequency of about 5.6 kHz with consistent spike amplitude while ensuring resets.

These parametric optimizations were aimed at realizing simulations that were closer to their biological counterparts by operating devices in the subthreshold or near threshold region of the transistor. During the transient analysis, power analysis was carried out, which showed the power consumed by the neuron is a very small percentage of the total power of the system, thereby making it feasible for implementation in applications that are energy-constrained.

The neuron showed stable integration properties regardless of the variance of the current supplied to it, which is key for applications that make use of memristive synapses with a gradual change in the current supplied by the synapses during training. In order to investigate the scalability of the designed cell as well as the portability of technology, the same neuronal circuit was simulated with 90 nm CMOS technology.

In this analysis, it was observed that despite the slight decrease in membrane charging times as well as an increase in power dissipation, the developed neuronal cell accurately fired without any issues. Notably, the firing rhythm was similar to that of the 45 nm technology-based design, ensuring that the neuronal cell is independent of scaled-down technology.

Comparing the results of the 45 nm simulation with that of the 90 nm simulation showed that the optimized neural circuit is robust for various technology nodes. Though it is evident that 45 nm yields more power-efficient and dynamical systems, the 90 nm simulations show that the neural

circuit works satisfactorily in more pessimistic process environments. Such cross-validation of nodes enhances the credibility of the neural network circuit model. In conclusion, the schematic-level simulations of the neuron show that the spiking neuron with optimized spikes is able to operate with low power consumption and biological realism for both 45 nm and 90 nm CMOS technology nodes. Such observations provide a robust foundation for the integration of neurons with memristive synapses for learning.

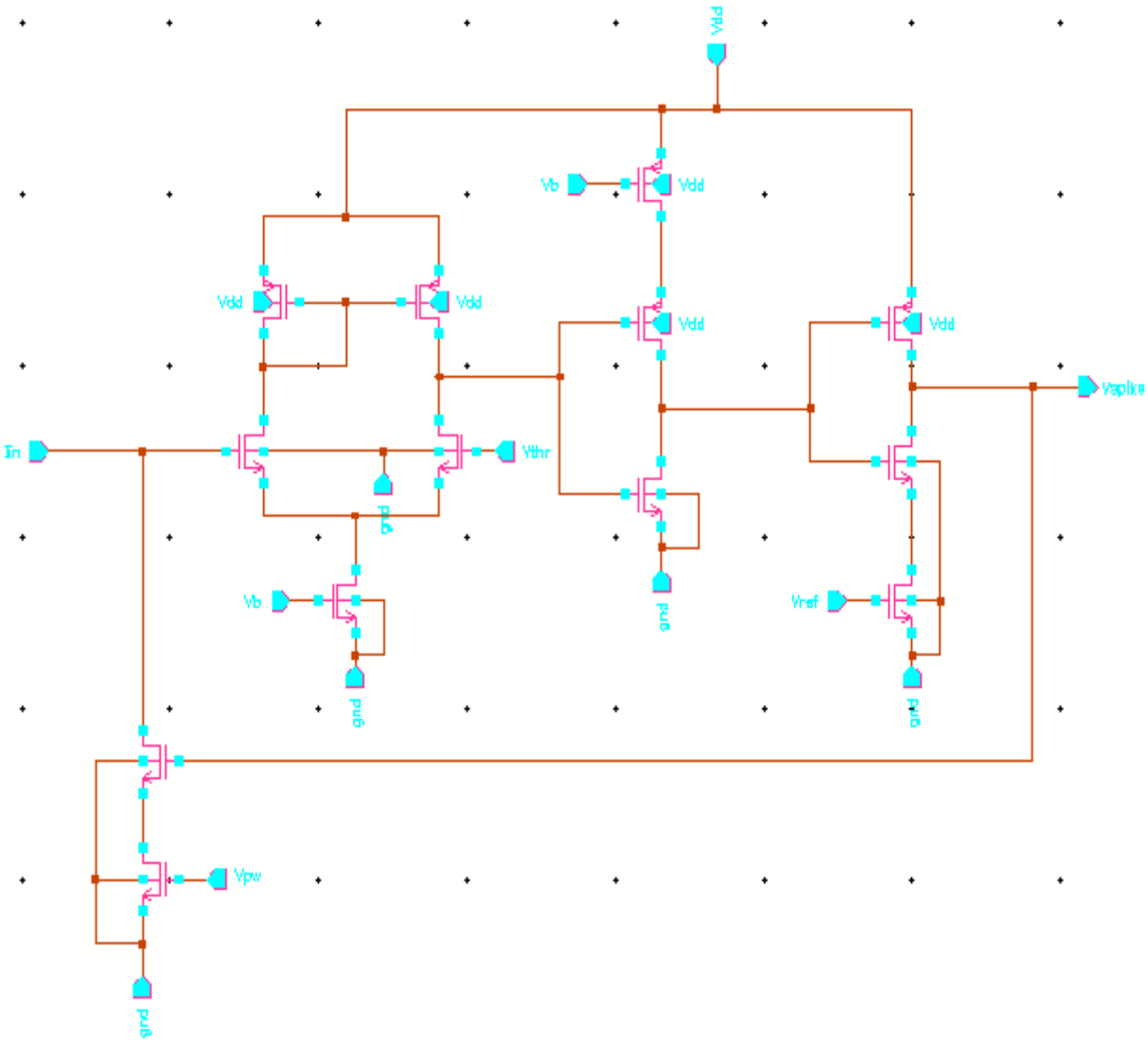

Figure 3.3 : Analog neuron schematic

To further ensure reliable neuron behavior under realistic operating conditions, extensive transient simulations were conducted for a wide range of input stimulus profiles. These included constant current injection, pulsed synaptic currents, and burst-type inputs to emulate biological firing scenarios. The neuron exhibited consistent temporal integration in all cases, smoothly accumulating membrane voltage and sharply generating spikes at threshold crossing. This

confirms that the neuron responds proportionally to synaptic drive, an essential requirement for meaningful learning when connected to adaptive synapses.

One of the key optimizations was finding a sweet spot between firing sensitivity and noise immunity: bias currents and leakage paths had to be set in such a way that, without sufficient input stimulus, the neuron stays in an OFF state and is not subject to spurious firing because of noise or device mismatch. This becomes especially sensitive in the subthreshold operation due to great sensitivity to even small variations.

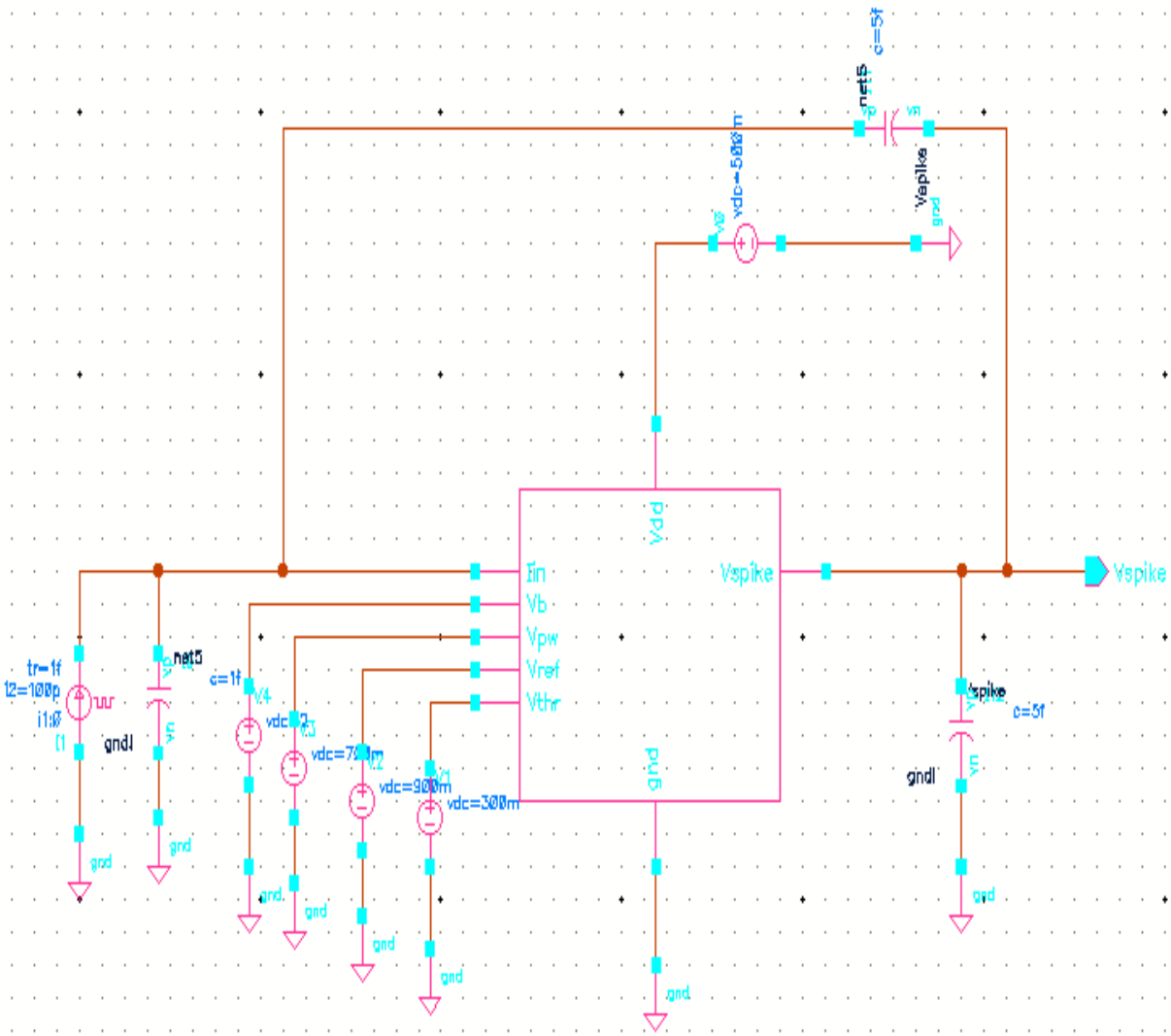

Figure 3.4 : Analog neuron test circuit

The simulation results showed that it keeps a clear separation of resting and firing states even at slowly varying or fluctuating input currents around the threshold level. Detailed technology scaling effects were examined by comparing the membrane charging dynamics, spike widths, and refractory behavior of the 45 nm and 90 nm simulations. Although the 45 nm implementation enjoys faster response and lower energy per spike, the 90 nm variation is very instructive in terms

of conservative operating margins and robustness. The neuron's capability to maintain stable firing across the two nodes points to its operation due to architectural design and not technology-specific tuning, improving its portability.

Another critical issue in neuron optimization was the compatibility of neurons with memristive synaptic outputs. The memristor-based synapses usually generate analog currents, which show a gradual variation; thus, the neuron was tuned to integrate small current levels without requiring large input amplitudes. Simulation results highlight that the neuron can reliably detect and integrate the low-level synaptic currents, making it appropriate for learning-based neuromorphic systems in which weights evolve slowly over time.

Finally, long-duration simulations were performed to observe neuron behavior over extended time windows. These simulations verified that no drift, unintended oscillations, or accumulation errors occur during prolonged operation. The neuron showed consistent firing patterns and reset behavior throughout, reinforcing its suitability for continuous, always-on neuromorphic processing.

3.3.1 Step-by-Step Working of the Analog Spiking Neuron Circuit

Step 1: Input Current Reception

Synaptic input current (Iin) is received from the connected synapse block. This is the weighted contribution of the pre-synaptic spikes, after the memristor-based synaptic modulation.

Step 2: Integration of the Input Signal

The input current is integrated at the membrane node, through a capacitor. As the input current accumulates charge, the membrane voltage (Vm) starts growing gradually, thus emulating biological membrane potential integration.

Step 3: Leak Mechanism

A controlled leakage path is provided through MOS transistors biased in subthreshold/weak inversion. This leak continuously discharges the membrane capacitor and prevents unlimited voltage buildup, allowing realistic temporal dynamics.

Step 4: Threshold Detection

A comparator-like transistor stage continuously monitors the membrane voltage. When Vm exceeds a reference threshold voltage (Vth), the neuron detects a firing condition.

Step 5: Spike Generation

Once the threshold is exceeded, a fast regenerative path is activated and it generates a sharp voltage spike at the output node, Vspike. This spike is of a digital wave shape but generated by using analog CMOS circuitry.

Step 6: Reset Operation

Immediately following spike generation, the membrane capacitor is discharged by a reset transistor. This returns Vm to its resting potential, making ready the neuron for another integration cycle.

Step 7: Refractory Behaviour

The reset and bias network provides a brief refractory period during which the neuron becomes temporarily insensitive to new input. This prevents multiple firing from a single input event.

Step 8: Spike Propagation to Synapse

The output spike (Vspike) is sent to:

- Downstream synapses for the transmission of signals
- STDP learning circuitry for synaptic weight updates

Step 9: Low-Power Operation

This ensures that all the transistors operate in low-current regions, significantly reducing static and dynamic power consumption. Therefore, this will enable ultra-low-power spiking behavior suitable for always-on neuromorphic systems.

Final Decision:

This paper demonstrated successful integration by the neuron, which includes leakage, threshold detection, spike generation, reset, and refractory control to resemble the operation of a biological neuron at high energy efficiency.

3.4 Integration of Triple-Memristor Synapse between Two Neurons

After independent validation of the spiking neuron and the triple-memristor synapse, the subsequent process was to integrate the synaptic structure between two neurons to make a functional neuron–synapse–neuron pathway as shown in figure 3.5 . Integration represents an important step toward the realization of a biologically inspired neuromorphic system, whose information flow was conveyed and modulated through adaptive synaptic connections. The objective of this phase was to guarantee correct signal transfer, stable synaptic weighting, and compatibility between neuron spiking behavior and memristive synaptic dynamics.

In the integrated configuration, the output spike from the first neuron acts as the pre-synaptic signal driving the triple-memristor synapse. The effective conductance of the three memristors together determines the magnitude of synaptic current delivered to the second neuron. The integration thus spreads the synaptic weight over three memristive devices, allowing smoother current modulation with reduced sensitivity to abrupt state changes of any single device. This improves reliability by allowing gradual influence on the postsynaptic neuron's membrane potential.

Special care had to be taken that the synaptic read operation does not disturb the stored memristor states. Read and update pathways were implemented separately so that typical spike transmission takes place without any accidental weight modification. During nominal operation, the triple-memristor synapse acts as a weighted current source-a pre-synaptic spike is converted into scaled synaptic currents. These are integrated at the post-synaptic neuron, driving its firing behavior controllably.

Transient simulations of the integrated system demonstrated proper end-to-end functionality: presynaptic spikes reliably drove consistent postsynaptic responses whose firing latency and frequency depended on the effective synaptic weight. As the summed memristor conductance was increased, the postsynaptic neuron reached threshold sooner, while for decreased synaptic conductance, firing was delayed or suppressed, much as one would expect in biological synapses.

The integration also showed stable operation under repetitive spiking activity. Long-duration simulations also showed no unwanted drift in the neuron membrane voltage and synaptic current level during normal operation.

This confirms that the triple-memristor synapse can interface reliably with analog neurons for long periods of time without causing any instabilities in it or excessive power consumption. In other words, the integration of a triple-memristor synapse between two neurons will lead to the creation of a functional neuromorphic micro-circuit that also enables weighted signal transmission and adaptive behavior.

This will now form the basis for the further learning-enabled extensions and validates the compatibility of memristive synapses with ultra-low-power CMOS spiking neurons.The integrated triple-memristor synapse between two spiking neurons, highlighted here, is an important development in the pursuit of an energy-efficient neuromorphic processing unit.

This stage emphasizes the formation of a complete path for signal transmission, wherein neuronal spikes emitted by the pre-synaptic neuron undergo modulation by an adaptive synaptic interface before reaching the post-synaptic neuron. The integrated architecture is very reminiscent of

biological neural communication, whereby all signals transmitted between neurons are modulated by synapses for strength and timing in neural connections.

In the work, three memristive devices were in parallel to provide a composite synaptic element between the two neurons. This is, inherently, a triplememristor configuration that offers finer control over synaptic conductance than would be possible with a single memristor, and thus allows smoother weight transitions and improved robustness against device variability.

In distributing the synaptic influence across multiple devices, the integrated synapse mitigates abrupt conductance changes while ensuring stable interaction with the analog neuron circuits under repeated spiking activity.This directly uses the pre-synaptic neuron output for exciting a synaptic structure and produces a current proportional to the combined memristor conductance. This current is then injected into the input node of the post-synaptic neuron, where it contributes to membrane potential accumulation.

Integration was carefully executed with regards to maintaining the magnitude and temporal profile of the synaptic current in a manner compatible with the integration and firing dynamics of the neuron, without resulting in false triggering or saturation effects. Extensive transient simulations confirmed the correct functional behavior of the integrated neuron-synapse-neuron system. For an increase in the effective synaptic conductance, the post-synaptic neuron exhibited faster membrane charging and higher firing probability.

Lower values of synaptic conductance resulted in a strongly delayed or suppressed post-synaptic spike. This clear modulation of neuronal response confirms that the triple-memristor synapse does implement weighted signal transmission correctly, as dictated by biological synaptic mechanisms.

A key result of such integration is the ultra-low power consumption. The integrated neuron-synapse-neuron block, including the triple – memristor synaptic interface, consumed a mere 11.74 nW of average power in standard spiking operation in 45 nm technology.

This record-low power level illustrates suitability of the proposed architecture for large-scale neuromorphic systems, where millions of synapses and neurons must operate concurrently under stringent energy constraints. Apart from the implementation of the triple-memristor synapse between two neurons in 45 nm, the study of technology scalability and robustness has also been conducted in 90 nm CMOS technology. The same architecture of neuron–synapse–neuron was kept to assure functional consistency over different technology nodes.

The corresponding 90 nm simulations demonstrated correct synaptic modulation of post-synaptic neuron firing behavior; membrane potential dynamics and spike timing are close to those obtained in the 45 nm implementation. While larger feature size resulted in a bit larger parasitic effects and

higher power consumption compared to the 45 nm node, the system continued to work within ultra-low-power limits. The 90 nm implementation has thus provided a conservative validation vehicle, representative of realistic fabrication constraints and layout-aware behavior.

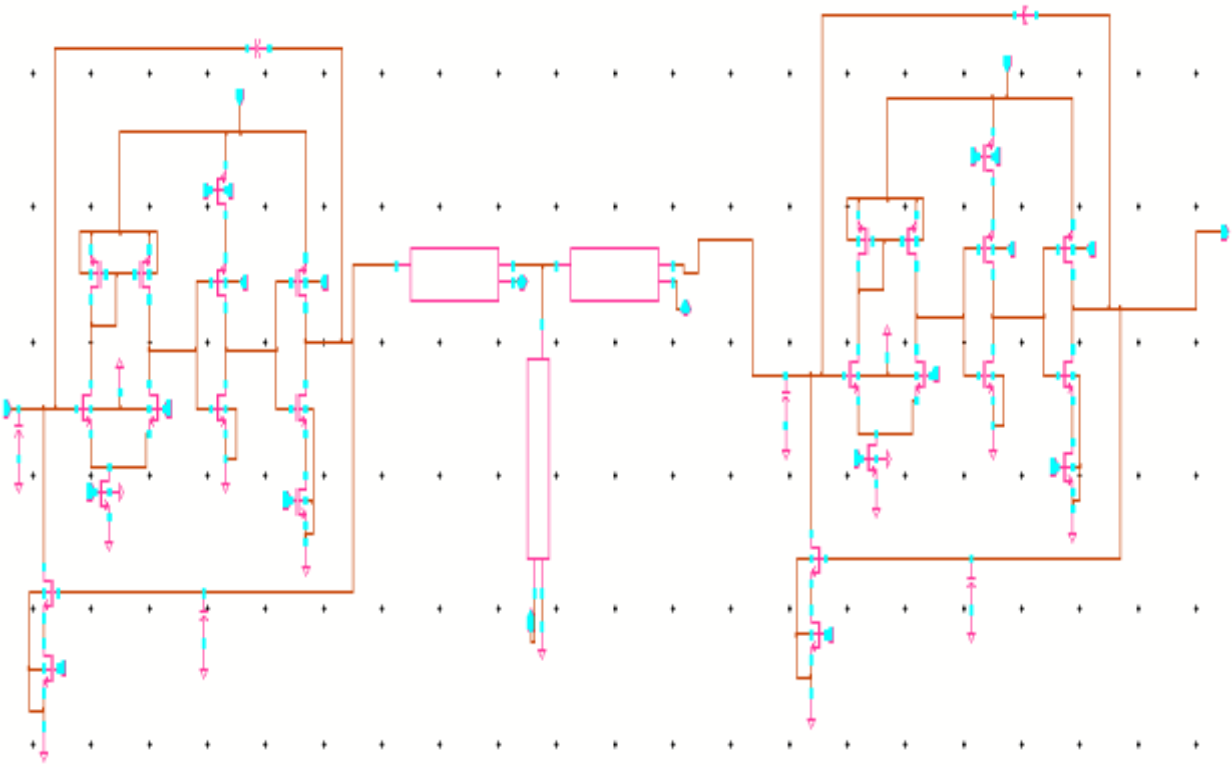

Figure 3.5 : Triple memristor synapse with neuron schematic

Indeed, the triple-memristor synapse exhibited stable conductance states under repeated spiking activity, and successful signal transmission between neurons was preserved; this verifies that the proposed synaptic integration strategy is not strictly bound to aggressive technology nodes but can be materialized using mature CMOS processes, often favored for reliability, yield, and academic prototyping.

The low power consumption is primarily due to the analog nature of the neuron circuits and the non-volatile behavior of the memristors. Because memristors maintain their conductance states without continuous power, no static power is consumed to retain synaptic weights. Also, synaptic current flows only during spike events, further reducing dynamic power consumption. It can be seen that the advantage in the triple-memristor configuration is maintained while weight resolution and operational stability are improved.

Longer-term simulations, including continuous spiking activity, also demonstrated stability of the integrated system with no degradation of performance. Neuron firing rates, synaptic current magnitudes, and membrane voltage dynamics did not drift over time, reflecting reliable neuron-memristive synapse interaction. Importantly, no parasitic disruption of memristor states occurred

under normal read operations; synaptic weights were unaffected, except through explicit modification by learning processes.

Such successful integration can be considered an indication that neuromorphic building blocks based on low power and scalable CMOS neurons combined with synapses represented by memristors are possible. This is only successful due to the reason of demonstrated 11.74 nW power consumption, which has been done along with stable synaptic modulation and signal transmission inspired by biology. Thus, the proposed design can be credited for this success. Such a neuron–triple-memristor–neuron setting can be a basic unit while implementing larger spiking neural networks possessing features like ultra-low energy operation and on-chip learning.

In summary, a triple-memristor synapse was integrated between two neurons in both 45 nm and 90 nm CMOS technologies to validate the functionality, energy efficiency, and scalability of the proposed neuromorphic building block. The 45 nm implementation exhibited ultra-low power consumption of 11.74 nW, which makes it suitable for any energy-constrained neuromorphic applications, while the 90 nm implementation demonstrated robust and reliable operation under conservative process conditions.

Together, these results present a low-power, technology-independent, and scalable solution for a proposed neuron–synapse–neuron architecture in future neuromorphic systems with adaptive synaptic learning.

3.4.1 Step-by-Step Working of Triple Memristor Integration between Two Neurons

Step 1: Generation of Spike by the Pre-Synaptic Neuron

The first neuron integrates its input current over time. When the membrane voltage reaches the threshold, the neuron generates a spike at its output. This spike acts as the presynaptic signal and gets applied to the synaptic interface connected between the two neurons.

Step 2: Distribution of the Spike Across Triple Memristor Synapse

This generated pre-synaptic spike is fed in parallel to the triple-memristor synaptic structure. Each memristor acts as a programmable conductance unit, and they jointly provide a composite synaptic weight. The utilization of three memristors in parallel/series improves the weight resolution, stability, and dynamic range compared to a single memristor.

Step 3: Effective Synaptic Weight Formation

The total synaptic weight depends on the combined conductance of the three memristors. The incoming spike would either be attenuated or amplified, depending on their programmed resistance state. This enables fine-grained control of the synaptic strength and enhances robustness against device variability.

Step 4: Voltage Spike Transduced into Synaptic Current

This weighted voltage is internally converted to a synaptic current as the spike propagates through the memristive synapse. This synaptic current is then injected into the input node of the post-synaptic neuron in a way that emulates biological synaptic transmission.

Step 5: Integration by the Post-Synaptic Neuron

Accordingly, the post-synaptic neuron integrates the incoming synaptic current together with any other inputs. Consequently, the membrane voltage gradually increases based on weighted contribution from triple-memristor synapse.

Step 6: Spike Generation at the Post-Synaptic Neuron

When the membrane voltage of the post-synaptic neuron exceeds its threshold, it fires an output spike. The firing behaviour will depend directly on the effective synaptic weight set by the triple-memristor combination.

Step 7: Energy Efficiency Operation

Since memristors are non-volatile, the synaptic weight is maintained without any static power consumption. The use of three interleaved memristors allowed ultra-low-power execution, and overall, the neuron-to-neuron communication achieved power consumption in the nanowatt range ≈ 11.74n W.

Step 8: Scalability and Technology Validation

The same triple-memristor synapse structure was validated in both 45 nm and 90 nm CMOS technologies. Consistent functional behavior across nodes confirms that the integration approach is scalable and suitable for larger neuromorphic networks.

3.5 Spike-Timing Dependent Plasticity (STDP) Learning Circuit

The STDP learning circuit is designed to enable adaptive synaptic behavior by dynamically modifying synaptic strength according to the relative timing of pre-synaptic and post-synaptic spikes as shown in figure 3.6 . This circuit operates as a learning controller that wraps around a memristive synapse and plays a crucial role in translating spike timing information into physical weight updates. The major components involved in this circuit are an operational

transconductance stage, timing-dependent spike shaping networks, CMOS switches implemented through transistors, and a latch-based control unit.

The Gm block represents the core decision-making part of the STDP circuit. It takes in voltage signals from pre-synaptic and post-synaptic spikes. Each of these spikes undergoes preliminary processing by a shaping network RC that transforms the sharp digital-like spikes into exponentially decaying waveforms. Such shaping makes sure that the circuit captures correct timing differences between spikes, rather than just amplitudes. The Gm stage compares these two shaped signals and generates an output proportional to the time difference between pre- and post-synaptic events.

Transistors are used as analog switches that enable the learning phase in the synapse. The switches turn on only during valid spike interactions, which guaranties synaptic updates to occur at the learning windows only. Once turned on, the switches will enable Gm output to charge or discharge a control capacitor, connected to the synapse control node. This voltage directly controls the programming condition of the memristor whether its conductance should increase or decrease.

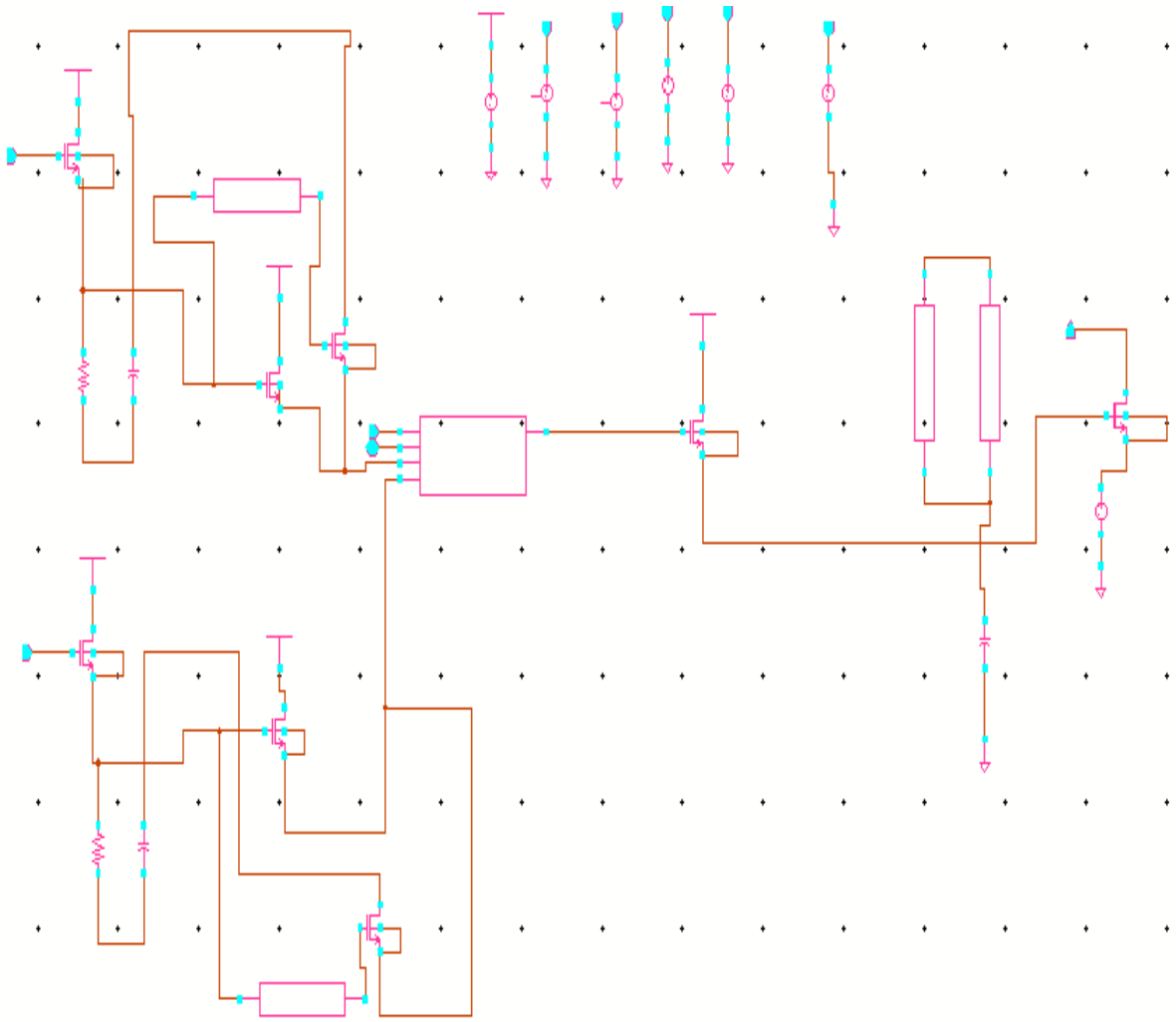

Figure 3.6 : STDP learning schematic for potentiation and depression

This includes a latch that stabilizes the learning decision and prevents unwanted or partial updates, due to noise or overlapping spikes. When a learning event is detected, the latch holds the control signal for a duration long enough to ensure a reliable and complete synaptic update. This greatly enhances robustness and repeatability, particularly in cases of high-frequency spike activity. The latch also isolates the synapse from continuous signal fluctuations, allowing discrete learning events rather than continuous drift.

The output behavior of the STDP circuit shows up as potentiation or depression of synaptic weight. When a pre-synaptic spike arrives before a post-synaptic spike, a positive control voltage generated by the circuit drives the synapse to its higher conductance state, thus potentiating it. In contrast, if the post-synaptic spike is first, followed by the pre-synaptic spike, the polarity of the control voltage reverses to force the synapse conductance lower, thereby depressing it. These two modes of operation mimic quite faithfully the biologically observed learning mechanisms.

In summary, the STDP circuit with all local unsupervised learning using very simple analog components can hold ultra-low power operation. Combining the concepts of operational transconductance amplification with transistor-based switching and latch-controlled stability, the circuit effectively converts spike timing differences into reliable synaptic weight updates. The resulting potentiation and depression characteristics validate successful hardware realization of spike-timing-dependent plasticity in the proposed neuromorphic system.

Not only does it provide adaptive updating of synaptic weights, the learning circuit is constructed in such a way as to provide stability, robustness, and ultra-low power consumption for the learning process. While using an operational transconductance amplifier facilitates accurate representation of relative spike timing differences into proportional analog signals for controllable weight updates, the learning path using switched elements also ensures that no spurious weight updates occur outside the desired timing window, ensuring that any noise does not trigger unnecessary learning events. Additionally, the latch stage helps ensure that the learning outcome is preserved for a sufficient amount of time to adequately set the memristive synapse, even in low-voltage conditions.

3.5.1 Step-by-Step Working of the STDP Learning Circuit

Step 1 : Spike generation by neurons

Then, a voltage spike Vpre is the output of the pre-synaptic neuron when the membrane potential crosses the threshold, whereas a spike Vpost of the post-synaptic neuron is based on its firing activity. The resulting spikes are used as timing inputs in the STDP learning mechanism.

Step 2 : Spike Shaping Using RC Networks

First, both Vpre and Vpost signals pass through an RC spike-shaping circuit. These networks transform narrow spikes into exponentially decaying analog waveforms. This shaping allows the circuit to capture the relative timing difference between spikes rather than only their occurrence.

Step 3: Timing Comparison by the Operational Transconductance Block

The two shaped pre- and post-synaptic voltages are routed to the inputs of the Gm amplifier. The output current from the Gm block is proportional to the time difference, Δt between Vpre and Vpost.

Step 4: Triggering Learning Switches

CMOS transistors act as switches and allow learning only when valid spike overlap conditions are met. If the timing difference falls within the STDP learning window, these switches turn ON and allow the Gm output to drive the synaptic control node.

Step 5: Latch-Based Stabilization of Learning Signal

The latch captures the learning decision and holds it against noise-induced or partial updates, making the synaptic update stable, discrete, and repeatable, even under high-frequency spike activity.

Step 6: Memristor Programming(Weight Update)

Applied to the memristor terminal is the latched control voltage.

- If Vpre occurs before Vpost, the memristor conductance increases → Potentiation (LTP)

- If Vpost occurs before Vpre, the memristor conductance decreases → Depression (LTD)

The memristor hence stores the synaptic weight as a physical resistance state.

Step 7: Updated Weight Affects Postsynaptic Neuron

This further adjusts the current delivered to the post-synaptic neuron, and thus directly influences the firing rate and spike timing in subsequent cycles.

Step 8 : Continuously Adaptive Learning

This process runs in a cycle continually, enabling the synapse to dynamically adapt according to the history of spike timing, thus facilitating unsupervised learning within the neuromorphic system.

Final Result :The circuit here replicates biologically inspired STDP learning where synaptic strength evolves through potentiation and depression, using low-power analog CMOS and device.

3.6 Pre-Layout and Post-layout for neuron in both 45nm and 90nm

Physical design verification is an important step in neuromorphic circuit design used to verify that the performance achieved at the schematic level is maintained after layout implementation. In this research work, the pre- and post-layout analysis of the neuron circuit is performed for both 45 nm and 90 nm CMOS processes.

Doing both allows for a comparison between an aggressively scaled node for the purposes of performance analysis and then a mature node for effective physical verification of design. This took into account layout implementation, design rule checking, layout versus schematic verification, parasitic extraction with Quantus, as well as post-layout simulation.

3.6.1 Pre-layout verification

Pre-layout verification was carried out at the schematic level for baseline functional and power performance analysis of the neuron circuit. Transient simulations were carried out to verify spiking responses, frequency of firing, leakage, and total power consumption. These simulations were carried out at both 45 nm and 90 nm technology nodes to understand the effect of technology scaling on power and timing. This phase of verification is important to ensure that the developed cell adheres to biologically plausible principles of integrate-and-fire models of spiking neurons, meeting low power requirements before actually implementing it at the layout phase. The pre-layout verification data is used for reference to compare the post-layout power analysis.

3.6.2 Layout Implementation in 45 nm and 90 nm CMOS

A standard cell-based layout of the neuron circuit was developed using Cadence Virtuoso Layout Suite for both 45 nm and 90 nm CMOS process design kits. Industry-standard layout techniques were adopted, such as matching of transistors, symmetric placement of cells, use of centroid structures for critical devices, and careful routing to reduce parasitic resistance and capacitance. While the 45 nm layout was utilized more for understanding the effects of scaling as well as power efficiency, the 90 nm layout was given more importance for its robustness properties of the physical design.

3.6.3 Design Rule Check

Upon completing the layout process, Design Rule Check (DRC) analysis was carried out to check for conformity with the manufacturing constraints imposed by the foundry. The DRC analysis checked for the violation of the minimum spacing, width, enclosure, or overlap of the layers for both 45 nm as well as 90 nm layout, for which both of the designs were found to be manufacturable with no geometry conflicts.

3.6.4 Layout vs. Schematic

Layout vs. Schematic (LVS) checks were performed to ensure that the layout is correctly representing the schematic intent. This is crucial for ensuring that there were no issues with device connections, transistor sizing, or correspondence between the nets of the schematic and layout. A good LVS match for both technology nodes verified that the functionality of the neuron circuit remained unchanged at the layout level.

3.6.5 Parasitic Extraction Using

After LVS, the parasitic extraction procedure using Cadence Quantus was carried out to obtain an extracted view (av_extracted), which models the resistive and capacitive coupling induced by the interconnects and device layout. The extracted parasitics were then back-annotated into the design to support realistic post-layout simulations. This is especially important for neuromorphic VLSI circuits since the extracted parasitics can affect membrane integration time constants and spike timing.

3.6.6 Post-Layout Simulation and Configuration

Post-layout simulations were carried out using the extracted view with a proper config view setup, choosing the av_extracted view for representation of all instances at the layout level. Transient analysis simulations were performed to test the effect of parasitic presence on spike waveform, rate of spiking, power dissipation, and timing with respect to spiking. Though there was some loss of processing speed, the cell operated in a stable spiking manner with low power consumption despite the presence of parasitics. The post-layout analysis showed a similar pattern to that of pre-layout analysis.

3.6.7 Comparative Analysis Between 45 nm and 90 nm

A comparison between the post-layout results of the 45 nm and 90 nm technology nodes was carried out for analyzing the effect of scaling. The 45 nm implementation showed better power efficiency, whereas the 90 nm implementation showed better layout stability and parasitic characteristics. This comparison proves that the proposed neural cell design is scalable as well as appropriate for both performance-based and manufacturability-based neuromorphic systems.

The Pre- and Post-Layout verification process verifies the correctness, manufacturability, and robustness of the neuron circuit design. Passing DRC/LVS analysis, along with the parasitic extraction capability of quantus, as well as post-layout simulations, ensure that the suggested neuromorphic building block preserves its desired functionality after physical implementation.

This helps lay a solid foundation for embedding learning-capable synapses for scaling up the design into a neuromorphic system.

Extensive pre-layout and post-layout verification has been performed in this work, confirming the physical correctness, robustness, and manufacturability of the proposed neuromorphic neuron design. Successful completion of both DRC and LVS in 45 nm and 90 nm CMOS technologies validates that the layout accurately reflects the intended schematic without violation of the foundry rules of design. Parasitic extraction using quantus and subsequent post-layout simulations through the av_extracted configuration demonstrate that, even under realistic interconnect and device parasitic effects, the neuron still exhibits stable spiking behavior with low-power operation.

Minor performance variations due to parasitic loading were realized, though overall functionality and energy efficiency remained consistent with the pre-layout results. The dual-technology evaluation further establishes the scalability of the design: 45 nm points toward more aggressive low-power performance while 90 nm ensures reliable physical verification. This comprehensive physical validation enhances the feasibility of employing the proposed neuron circuit in practical neuromorphic hardware systems.

3.7 Design Parameter Optimization Strategy

1 . Optimization of the Memristor Symbol :

The Verilog-A coded behavioral model of the memristor was optimized by adjusting major parameters that influence the switching phenomenon, like the initial switching state, the ratio of the ON and OFF resistances, and the rate of change of the switching states. The major aim of adjusting the parameters was to have a smooth switching and modulation of the conductance levels, rather than abrupt switching, which is very essential for the representation of synaptic weights. Several transient simulations were carried out to analyze the impact of parameter variation on the changes that take place in the resistance levels during the application of a spike current signal.

Particular care was exercised to choose a suitable value for the time step (dt) parameter in order to optimize stability and state tracking accuracy in the presence of transients. Where finer time steps had the advantage of higher accuracy but the penalty of increased simulation time, a suitable trade-off had to be made. The issues of threshold and stationary sub-threshold weight updates were also addressed. The optimized memristor model showed a smooth potentiation and depression curve in the repeated cycles of learnings without saturation points or numerical instability. This ensured the memristor symbol could be safely reused in different neuron and

synapse configurations and learnings. This formed a stable base for neuromorphic system simulations.

2 . Optimization of Neuron Parameters

The parameters of the neuron circuit were optimized to provide biologically inspired “integrate-and-fire” performance while being power-efficient. Critical parameters such as bias currents, leakage current paths, threshold voltage, and strength of the reset current were optimized to control the membrane potential dynamics and firing rate. The goal was to provide self-regulated spiking activity at low input current values while preventing misfiring or oscillations.

The optimizations were carried out separately in 45 nm and 90 nm CMOS technologies to consider the differences in their leakages, driving ability, and parasitic characteristics. Leakage reduction and power were of key concern in the 45 nm technology, as opposed to robustness and noise margins in the 90 nm technology. Transient simulations were used to confirm the spike uniformity in its occurrence.

During this optimization, the neuron performed well and got synchronized spiking with a consistent shape. The optimized parameters allowed it to work well with memristor synapses and learning interfaces, which helped it to integrate with the system seamlessly.

3 . Optimization of Memristor-Based Synapse between Two Neurons

While incorporating the memristor as a synapse between two neurons, optimization was aimed at maximizing weighted signal transfer, along with reduced loading to the preceding neuron. Memristor count, set conductance, as well as interconnect structure, were optimized to properly balance weight and robustness for the synapse. The arrangement involving three memristors was used to enable weight resolution as well as robustness to variations among individual memristors.

The synaptic settings were adjusted to optimize the pre-synaptic spiking to trigger sufficient post-synaptic response without excessively consuming power or distorting the signal. Transient simulations helped analyse communication between the neurons based on the strength of the synapses, permitting the optimization of the state values of the memristor.

Through this optimization, the integrated neuron-synapse system was able to achieve stable communication and ultralow power consumptions. In the 45 nm process, the optimization resulted in power consumptions of around 11.74 nW, and in the 90 nm process, it ensured functional robustness, thereby validating the effectiveness of the optimization strategy used in the synapses.

4 . STDP Learning Parameter Optimization

The STDP learning circuit was optimized to conform to biological learning rules. The learning

circuit was fine-tuned by varying the values of time constants, comparison thresholds, as well as the widths of update pulses in order to properly sense the difference in spike times between the presynaptic neuron and the postsynaptic neuron. This was hoped to provide a clean separation between the potentiation and depression regions without any overlapping.

The learning rate parameters were carefully adjusted to avoid rapid weight saturation or convergence. Long-term transient runs were also carried out to confirm that learning was approaching a stable point after a few spike time cycles. Both potentiation and depression were carefully observed to guarantee balanced and symmetric weight updates.

The STDP parameters allowed for smooth and controlled synaptic plasticity and adaptation, neither of which exhibited oscillations or instabilities. The parameters also ensured effective learning on-chip, which was compliant with the low-power requirements of neuromorphic hardware.

5 . Layout Optimization at 45 nm and 90 nm CMOS Technology Nodes

Here, the optimization of the layout involved the suppression of the effects of the parasites and consideration of manufacturability for the technologies involved. To compensate for mismatches in the critical devices, common centroid and symmetry methods were employed. These were followed by optimization of the routes such that the parasites contributing to the capacitances of the analog nodes were reduced. Additionally, the routes of the power and ground were chosen to provide stable bias points.

The differences between 45 nm and 90 nm layout designs were mitigated by varying spacing, routing density, and device sizing to satisfy technological constraints. For 90 nm, broader routing and conservative spacing enhanced robustness, whereas for 45 nm, a small layout was applied to diminish parasitic loading and power. The parasitic characteristics were analysed by using the Quantus post-layout analysis, whose results were used to provide feedback to the simulating performance. The parasitic effects were neglected, but it was found that optimization maintained the neuron spiking dynamics and learning.

3.8 Technology Scaling Considerations

The scaling of technology is a very important factor in neuromorphic circuit design, especially while considering ultra-low power spiking neurons and memristive synapses. For this, the study started with performing simulations and physical verification in both 45 nm and 90 nm nodes of CMOS technologies for understanding how device scaling would affect power consumption, spiking dynamics, learning behavior, and layout feasibility of neurons and synapses. Such a two-

node approach compares an advanced node optimized for energy efficiency with that of a mature node offering higher robustness and manufacturability.

One of the most remarkable differences between the two nodes was the power consumption. As the implementation on 45 nm takes advantage of reduced channel length, lower parasitic capacitances, and better efficiency of switching, it can push the ultra-low power consumption of an integrated neuron–triple-memristor system to about 11.74 nW. For the same reason, the node with 90 nm shows a larger dissipation of power, since its intrinsic capacitances are greater and operating currents are higher, hence the results show measured power in microwatts. The follow-up inference from this is that neuromorphic energy efficiencies do depend highly on the technology scaling.

From the perspective of neuron behavior, both technology nodes demonstrated successful biomimetic leaky integrate-and-fire dynamics; however, the 45 nm neuron has faster membrane charging and sharper spike transitions due to higher transconductance and reduced parasitics. The 90 nm neuron has slightly slower integration and recovery behavior-advantageous for stability and noise tolerance. Differences here suggest that while scaled technologies present performance and energy benefits, mature nodes provide more predictable analog behavior.

In the case of the triple-memristor synapse, technology scaling affects the efficacy with which synaptic weights could be updated and retained. In 45 nm, reduced parasitic loading allows clearer weight modulation and improved energy efficiency during learning events. Meanwhile, the 90 nm node introduces additional parasitic resistance and capacitance that slightly smooth weight transitions but improve tolerance to device mismatch and variability, making it a suitable choice for validation in terms of functional correctness and stability in learning.

STDP learning behavior was preserved across both technology nodes, thereby showing the robustness of the learning architecture. In 90 nm, wide timing windows make the learning circuit more forgiving to mismatch and process variations. An observation that attests to the importance of carefully tuning learning parameters as a function of the target technology node is hereby made. From a layout and manufacturability perspective, 90 nm technology provides relaxed design rules, easier routing, and higher confidence in yield for doing post-layout verification and parasitic extraction. For energy optimization, the 45 nm node is particularly aggressive at the schematic level. In this work, both nodes have been combined to show an integrated neuromorphic design methodology that provides a good balance between energy efficiency, functional robustness, and physical realizability and gives real-world performance bounds for any future neuromorphic hardware implementation.

CHAPTER 4

RESULTS AND DISCUSSION

Thorough circuit-level simulations were performed using Cadence Virtuoso to assess the functional accuracy, learning performance, and energy efficiency of the proposed neuromorphic architecture. The spiking neuron achieved a stable integrate-and-fire operation with exemplary biological responses such as membrane integration, threshold firing, and reset functions. Simulations conducted in a 45 nm CMOS technology proved ultra-low-power consumption with approximately 11.74 nW power consumption, 244.3 fJ energy efficiency, suitable for always-on neuromorphic solutions. Verification in 90 nm CMOS technology highlighted comparable spiking performance with marginally conservative behavior because of increased parasitic resistance, thus ensuring technology-independent circuit performance.

The integration of a triple-memristor synapse between two neurons was successfully tested with transient simulations, ensuring a proper weighted spike transmission function and reliable communication between two neurons. The memristor devices were properly controlled in a dynamic manner by the STDP learning circuit, ensuring a distinct potentiation and depression curve based on relative spike timings. Pre-layout simulations have ensured proper learning functions, and post-layout simulations with parasitic effects using av_extracted have tested the functionality of the circuit with parasitic awareness.

- **Simulation of Memristor with Verilog**

A behavioral Verilog-A model of a memristive synapse was developed and simulated in a Virtuoso Analog Environment CAD tool offered by the Cadence company. The Verilog-A model describes the dynamic resistance change in a memristor through an internal state variable, which corresponds to the conductive part of a memristor. Such a model is suitable for simulating continuous modulation of synaptic weights by electrical signals and can be used for modeling a learning process in a neuromorphic network. A memristor symbol can be drawn and used in designs in a way similar to other analog components.

Simulation experiments were conducted using voltage and current pulse stimuli simulating pre-synaptic and post-synaptic interaction with spike signals. The memristor demonstrated non-volatile resistance with increasing or decreasing conductance based on the signals applied. The state variable changed in a continuous manner without saturating abruptly, ensuring reliable performance during continuous cycles of learning.

The simulation outcome proved reliable resistance modulation with potentials and depressions, thus justifying the application of the memristor model in simulating an adaptive synaptic device. The simulation outcomes prove that a Verilog-A model of a memristor can accurately model synaptic memory and can be applied in system-level simulations as shown in figure 4.1 .

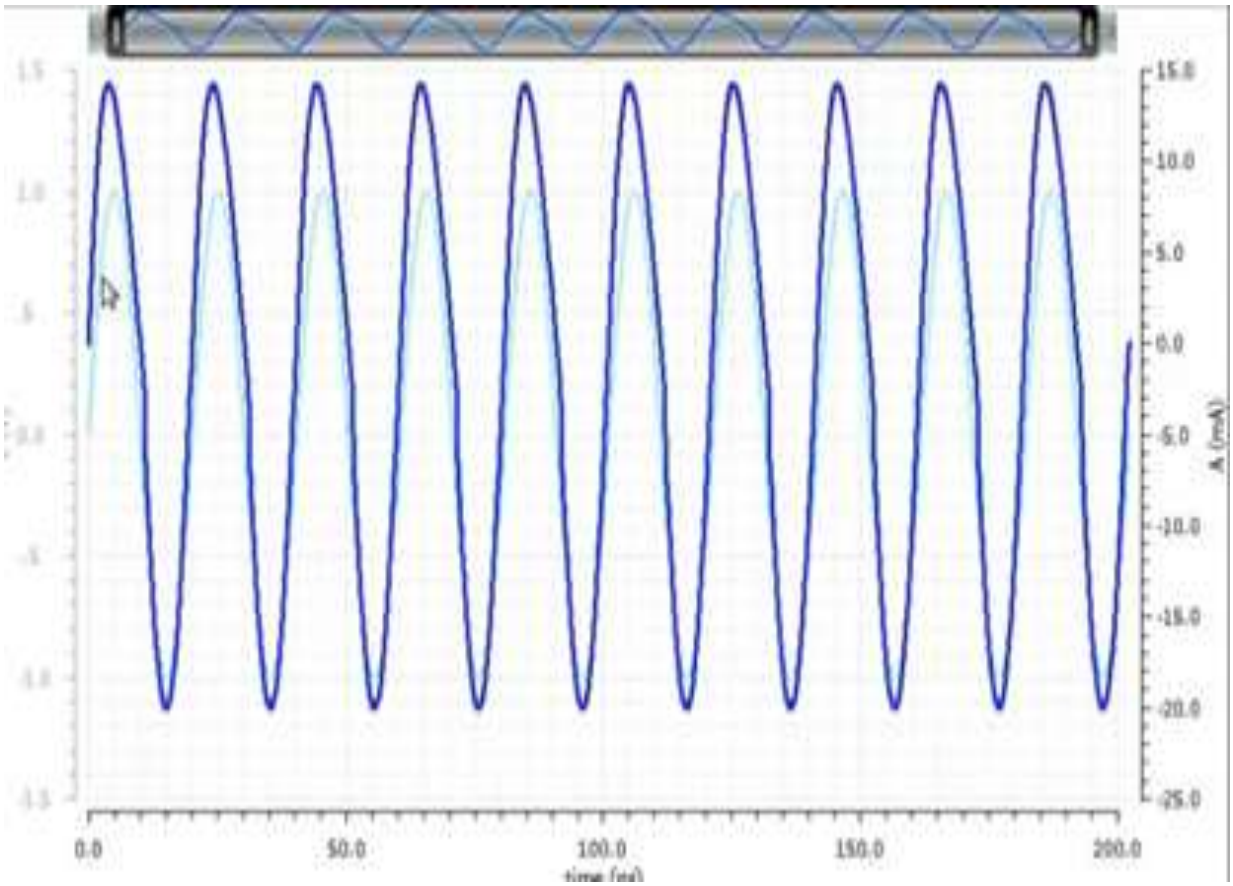

Figure 4.1 : Waveform of memristor

- **Simulation of Neuron**

A simulation of the spiking neuron circuit based on a schematic representation was conducted in order to inspect the dynamic integrate-and-fire model under input current stimulation. The transient simulation was performed using a series of current pulses injected into the circuit in order to simulate synaptic inputs. As a result of this simulation, it can be observed that each neuron integrates charges in a gradual manner up to a threshold level and fires a spike when this threshold is achieved. Once a spike is fired, another phase called a reset phase takes place in which all potentials are set to their resting state.

The waveforms produced in simulation show a biologically inspired firing pattern with controlled spike amplitudes, fixed spike width, and fixed inter-spike intervals as shown in figure 4.2 and figure 4.3 . The rate of firing was found to linearly correlate with increasing amplitudes of input stimuli, thus behaving in a leaky integrator manner. Power analysis performed during transient

simulation indicated ultra-low power consumption per spike, thus validating this platform to be suitable for energy-efficient neuromorphic chips. The neuron functioned without any degradation in spiking activity over multiple cycles without any distortions and missed firings, thus validating this platform to be robust in nature.

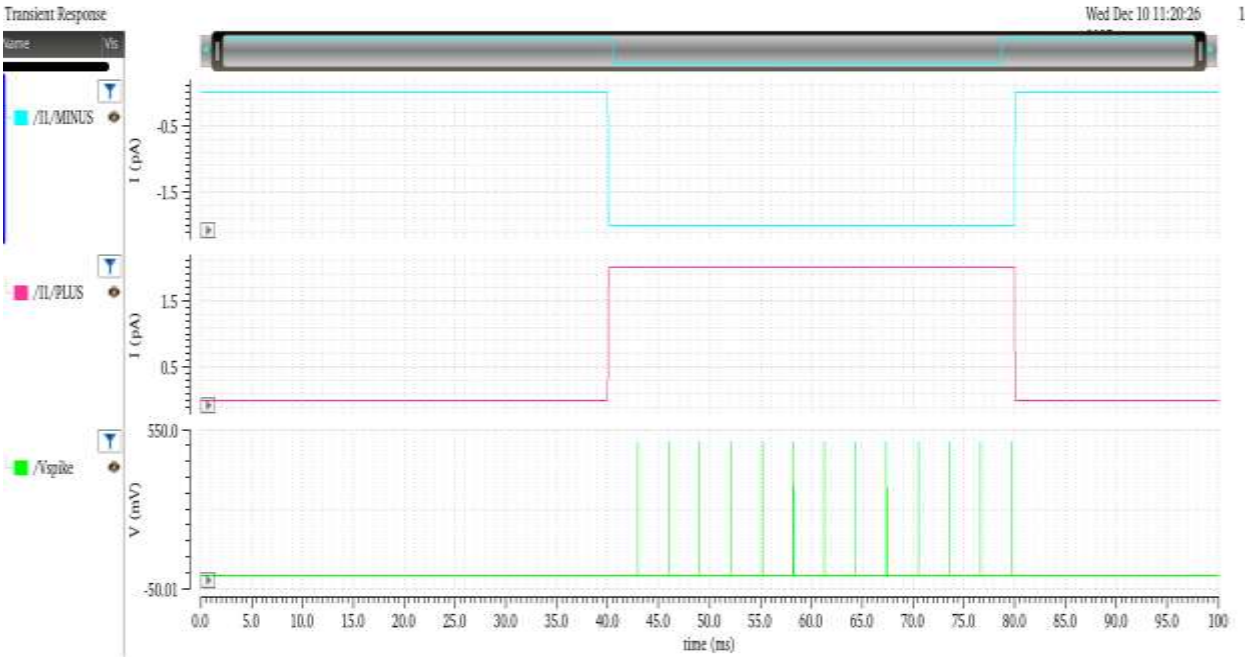

Figure 4.2 : Analog neuron transient response

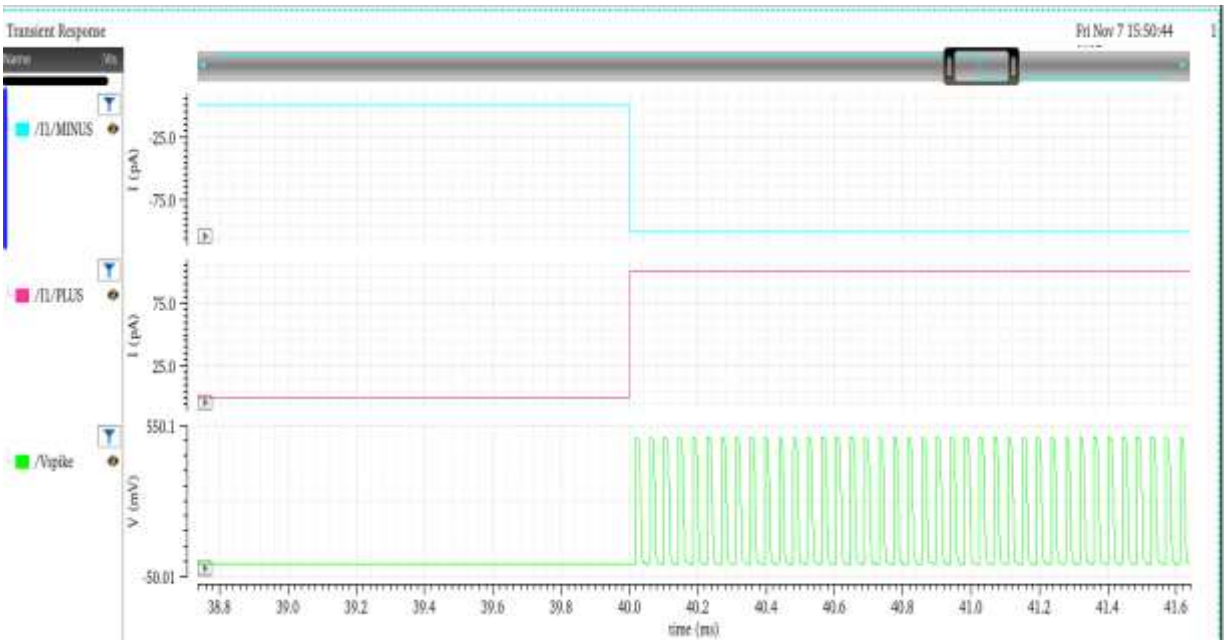

Figure 4.3 : Analog neuron transient response

Apart from ensuring proper functional spiking activity, simulations of neuron waveform were conducted to examine stability, reproducibility, and leakage characteristics over a prolonged

simulation time. The membrane potential returned to a normal state after each firing cycle, ensuring a proper leak function. No spurious firings were noted when subjected to continuous stimulation, ensuring proper thresholding functions.

The spiking pattern remained constant, including equal time intervals among firings, ensuring reliable performance amenable for a cascade of neuron connections. Based on these results, it can be concluded that the neuron circuit will function properly over an extended simulation time and thus can be used in combination with an adaptive synaptic learning circuit.

- **Integration of Triple-Memristor as Synapse between Two Neurons**

To implement synaptic communication with a weighted signal transmission, a triple-memristor synapse architecture was emulated between two spiking neurons to realize the basic neuron-synapse-neuron configuration. The three memristors, together, represent a composite synaptic weight with more resolution and robustness against single-device variability. The transient simulations included exciting the pre-synaptic neuron with input stimuli and observing the post-synaptic membrane potential and firing behavior through the memristive synapse as shown in figure 4.4 and 4.5 .

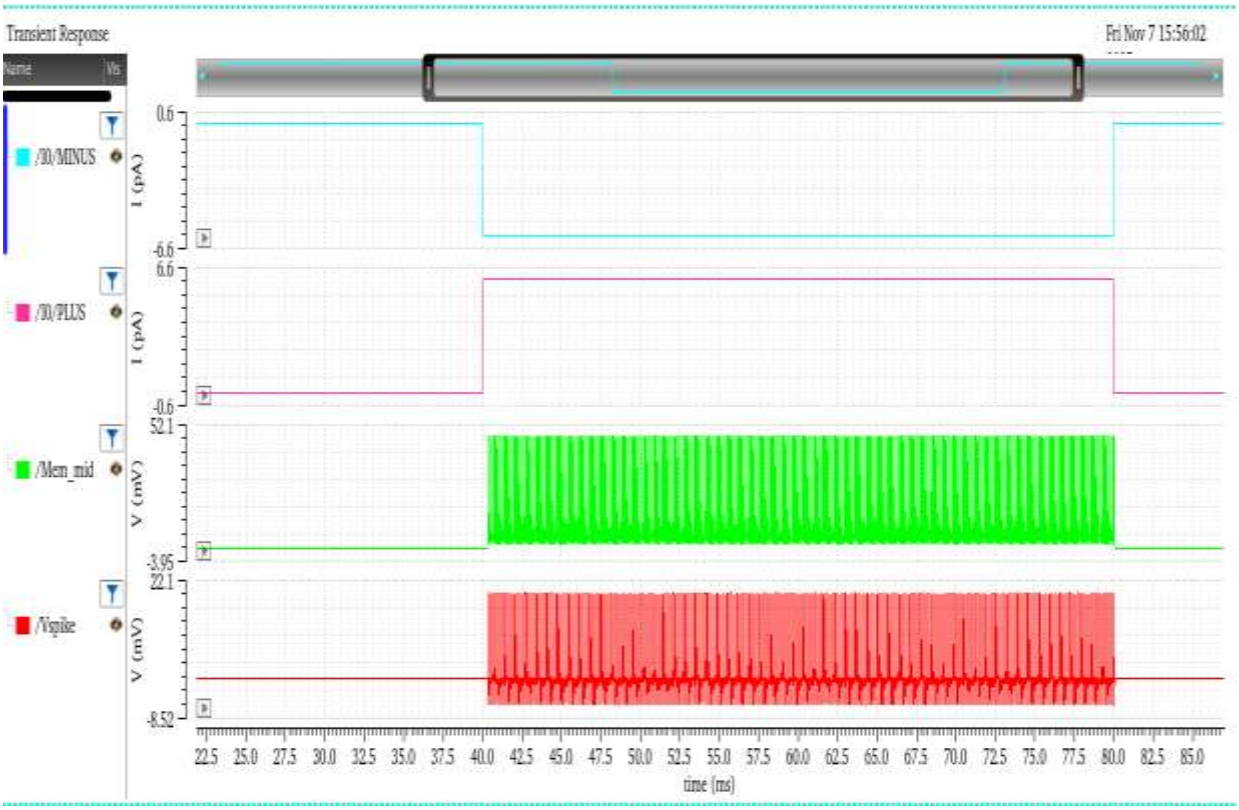

Figure 4.4 : Transient response of triple-memristor as synapse between two neuron

Simulation waveforms clearly show that spikes from the pre-synaptic neuron are appropriately gated, through the collective conductance of the triple-memristor synapse, before reaching the

post-synaptic neuron. The state of the memristors directly affects the amplitude and latency of the postsynaptic response, confirming appropriate weight-dependent signal transmission.The postsynaptic neuron follows the integrate-and-fire behavior consistently, and its firing activity is correctly controlled by the effective synaptic strength. Power analysis demonstrated that the integrated neuron–synapse system operates at ultra-low power, achieving ~11.74 nW, thus validating energy-efficient functionality. These findings confirm successful integration of the triple-memristor synapse into a stable and scalable platform for learning-enabled neuromorphic circuits.

Further characterization of the integrated neuron/synapse model reveals that the triple-memristor setup demonstrates enhanced stability during synaptic transmission compared to a single device setup. Moreover, during periodic spike firing, the total synaptic conductance increased in a gradual manner without steep saturation, which facilitated controlled firing regulation of the postsynaptic neuron. Additionally, using multiple memristive devices worked to alleviate vulnerabilities associated with individual device variability, leading to higher stability in firing activities among postsynaptic neurons. Moreover, during continuous firing, communication between the neuron/synapse model occurred effectively without degradation of spike firing.

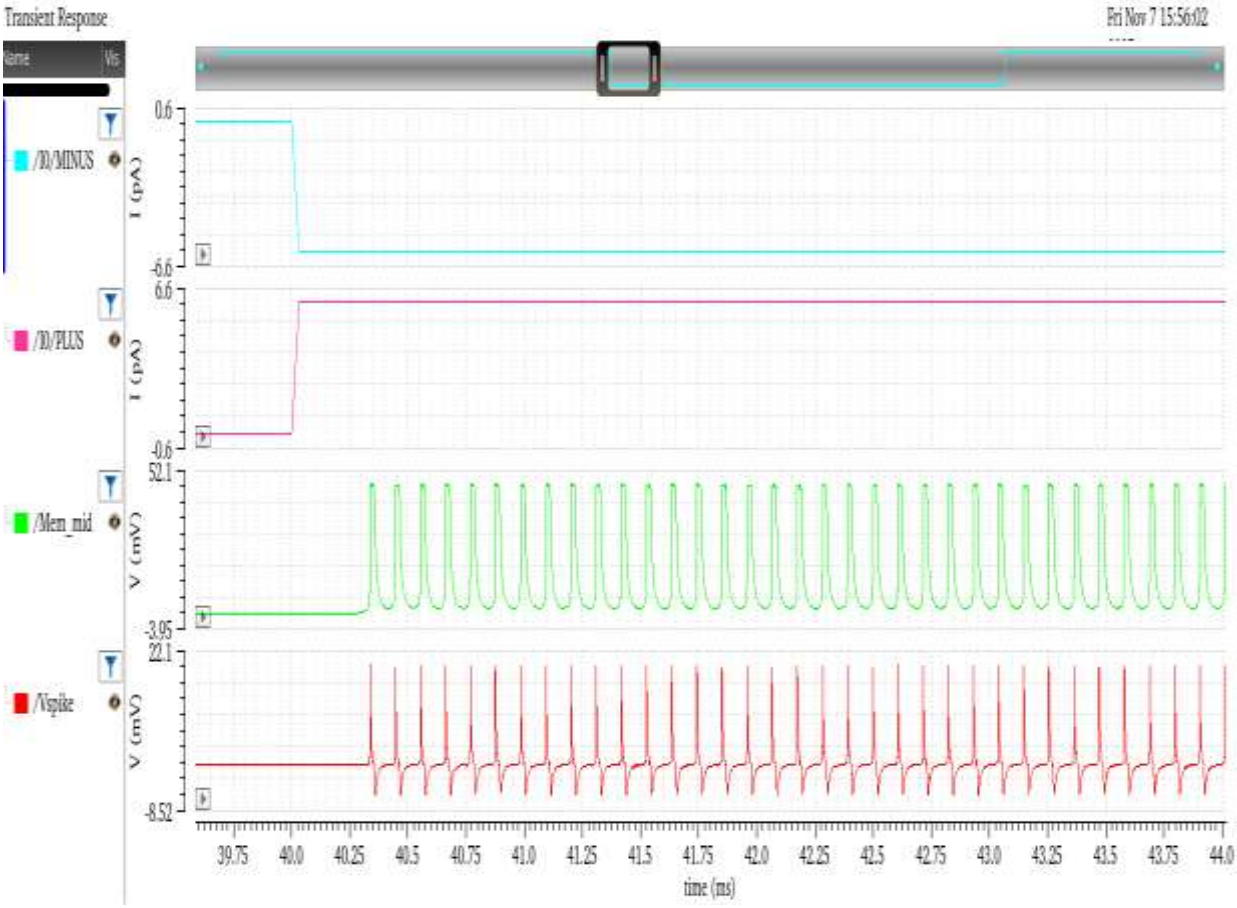

Figure 4.5 : Transient response of triple-memristor as synapse between two neuron

- **STDP Learning Simulation Results**

STDP learning was verified through the integration of the learning circuit with the memristive synapse between two neurons and transient simulations involving controlled pre- and post-synaptic spike timings. When the pre-synaptic neuron fired before the post-synaptic one within a given timing window, the synaptic weight increased, reflecting potentiation as shown in figure 4.6 . This was manifested as a gradual increase in the conductance of the memristor, amplifying the effect of pre-synaptic spikes on the post-synaptic neuron. The proposed learning circuit detected the spike timing difference correctly and provided the required control signals to the memristor state update.

Conversely, when the post-synaptic neuron fired prior to the pre-synaptic neuron, synaptic weight reduced, leading to depression as shown in figure 4.7 . This was reflected as a reduction of memristor conductance, which weakened the synaptic connection and reduced the probability of post-synaptic firing. The waveforms from simulation showed there were clear and stable transitions between potentiation and depression without abrupt or unstable weight changes. After repeated cycles of learning, the synaptic weights have converged smoothly, indicating controlled and stable learning behavior. These results confirm that the implemented STDP learning mechanism effectively enables adaptive synaptic modification that closely emulates biological learning processes while still operation at ultra-low power.

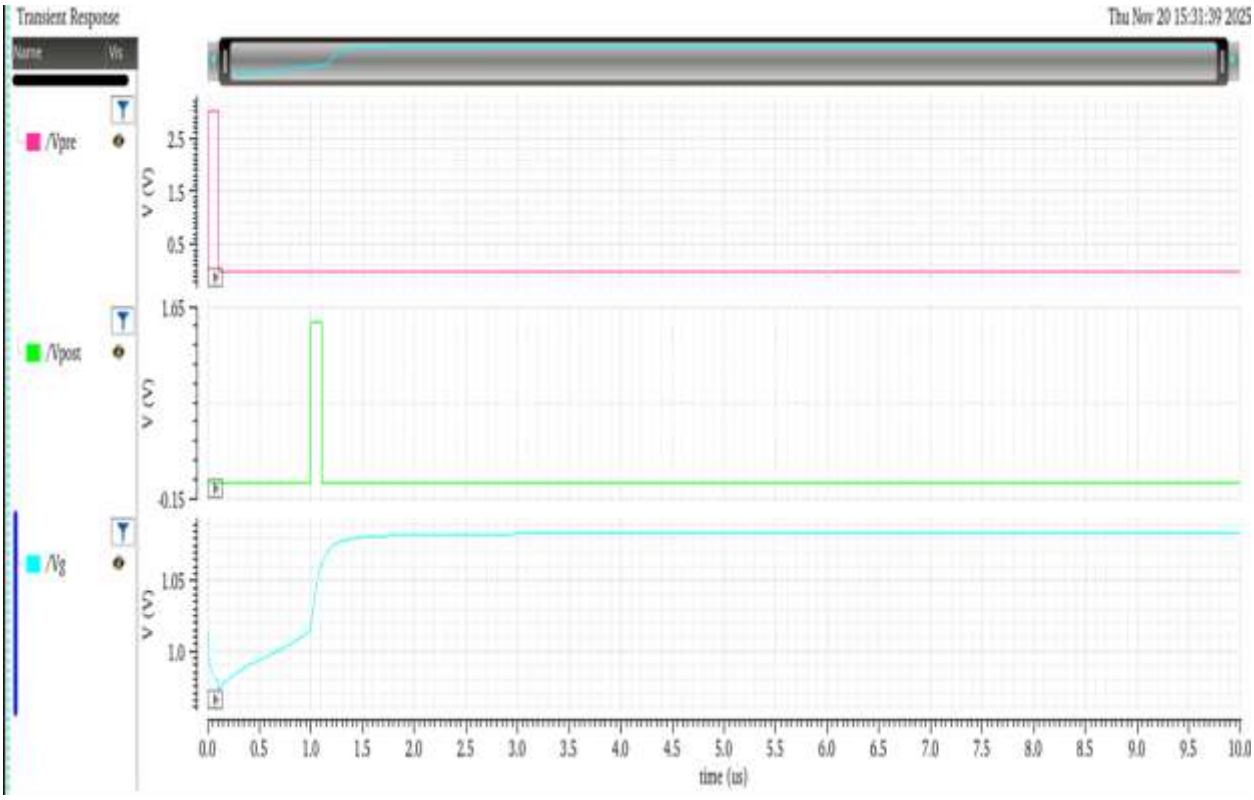

Figure 4.6 : STDP learning for potentiation

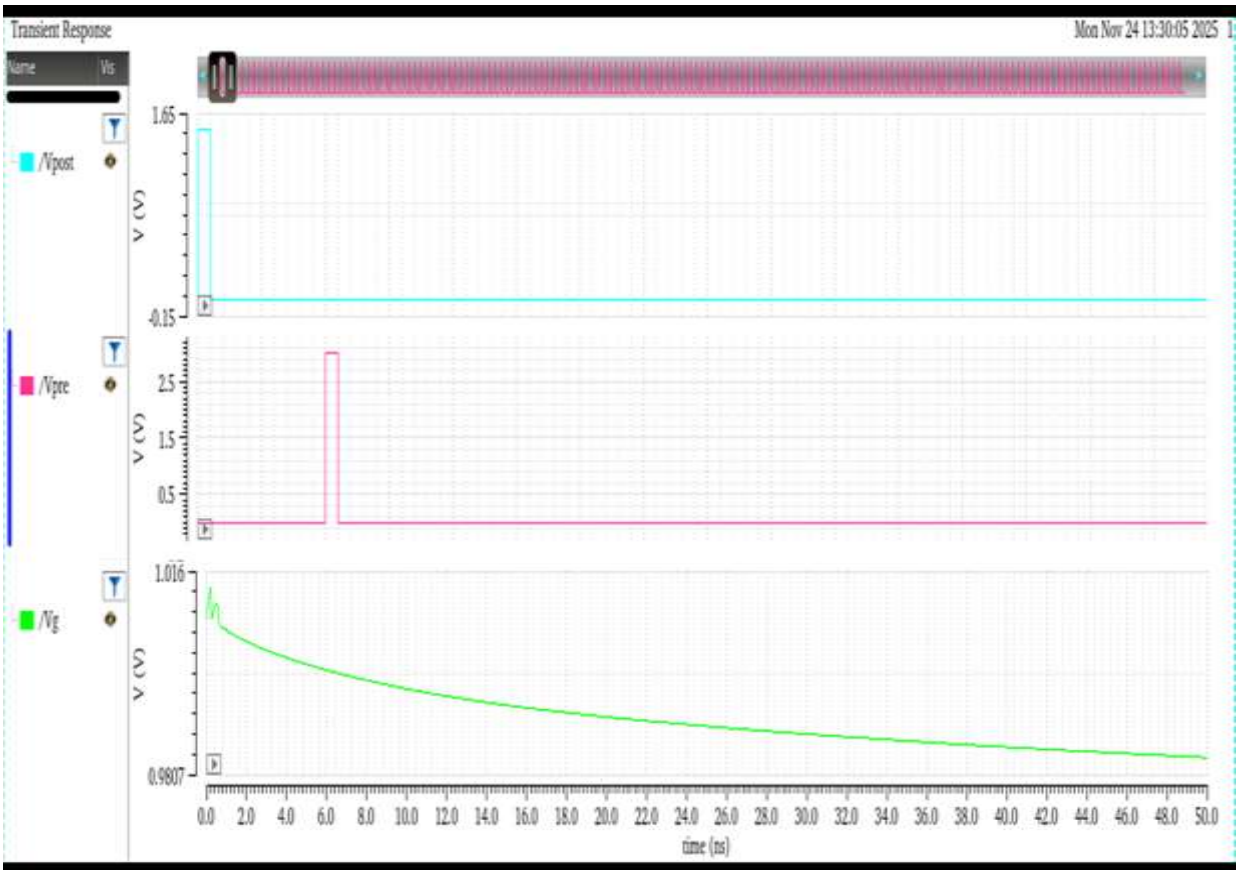

Figure 4.7 : STDP learning for depression

- **Layout and Post-Layout Simulation Results**

The simulation of a neuron circuit in a physical implementation manner was performed in both 45nm and 90nm CMOS technology. The design is a standard implementation in order to achieve efficient matching and an efficient route without any parasitic effects. After completing the design in a layout manner, Design Rule Check (DRC) analysis was performed to check all geometrical rules followed in a foundry technology. Layout Versus Schematic analysis will check if both netlists are matching or not. Successful analysis in both technology implementations ensures a correct structure of a design in a physical manner as shown in figure 4.8 and 4.9 .Further, parasitic extraction with quantus was carried out to model realistic interconnect and device parasitic effects, resulting in the construction of the av_extracted view for post-layout simulation. The extracted view as shown in figure 4.10 , 4.11, 4.12 and 4.13 was incorporated into the simulation platform using an appropriate configuration setup, facilitating effortless switching between schematic and extracted simulations. The subsequent transient simulations were carried out to assess parasitic resistance and capacitance effects on neuron spiking dynamics and power consumption. Although a small margin existed with respect to both time and magnitude in terms of pre-layout simulations, a stable spiking and ultra-low power function of the neuron remained intact.

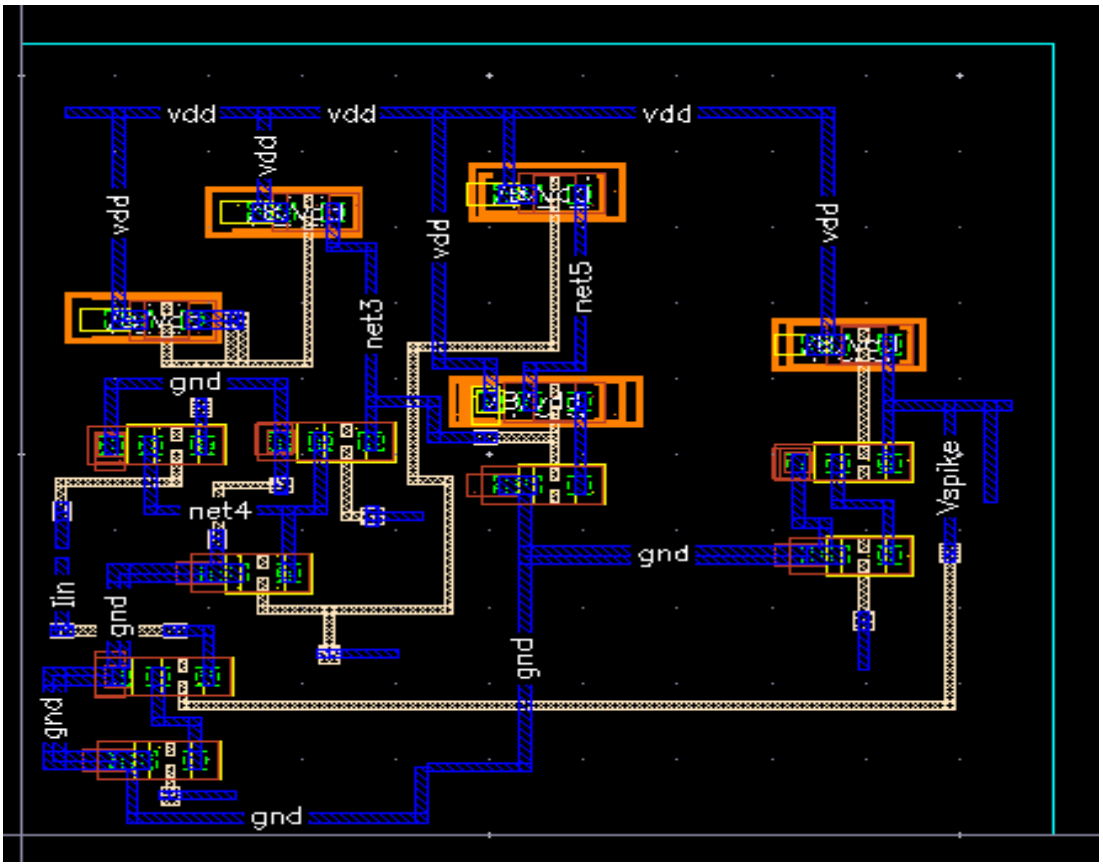

Figure 4.8 : Analog neuron layout in 90nm

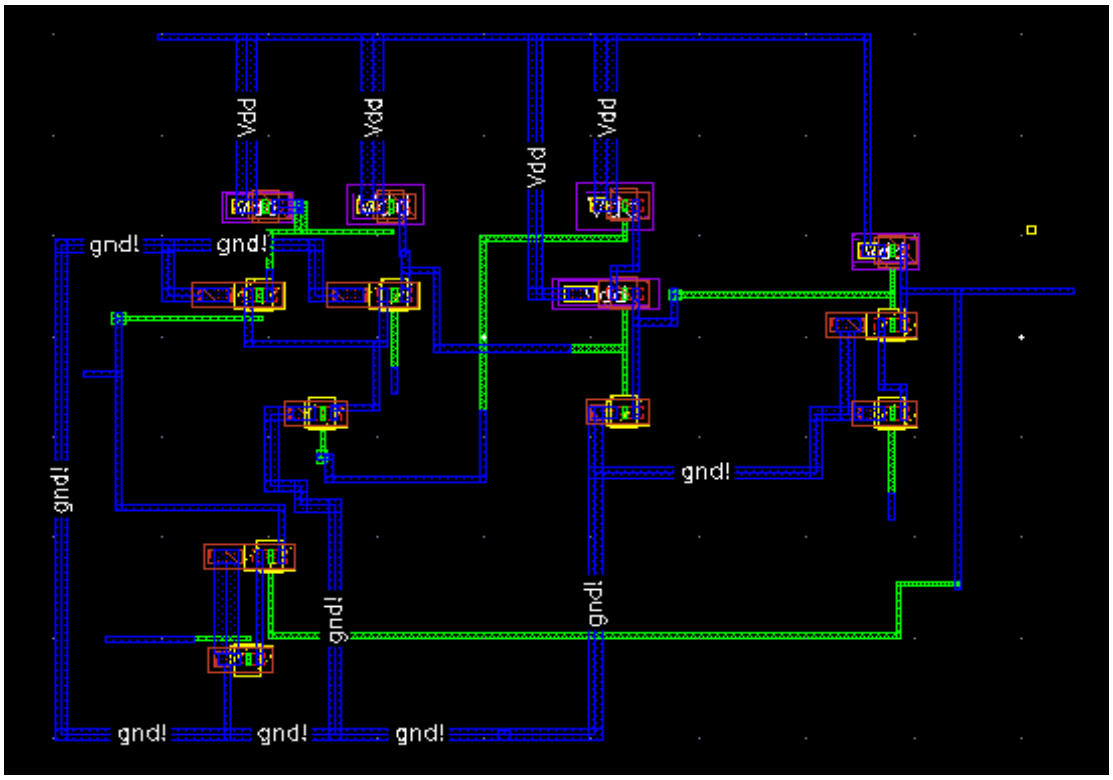

Figure 4.9 : Analog neuron layout in 45nm

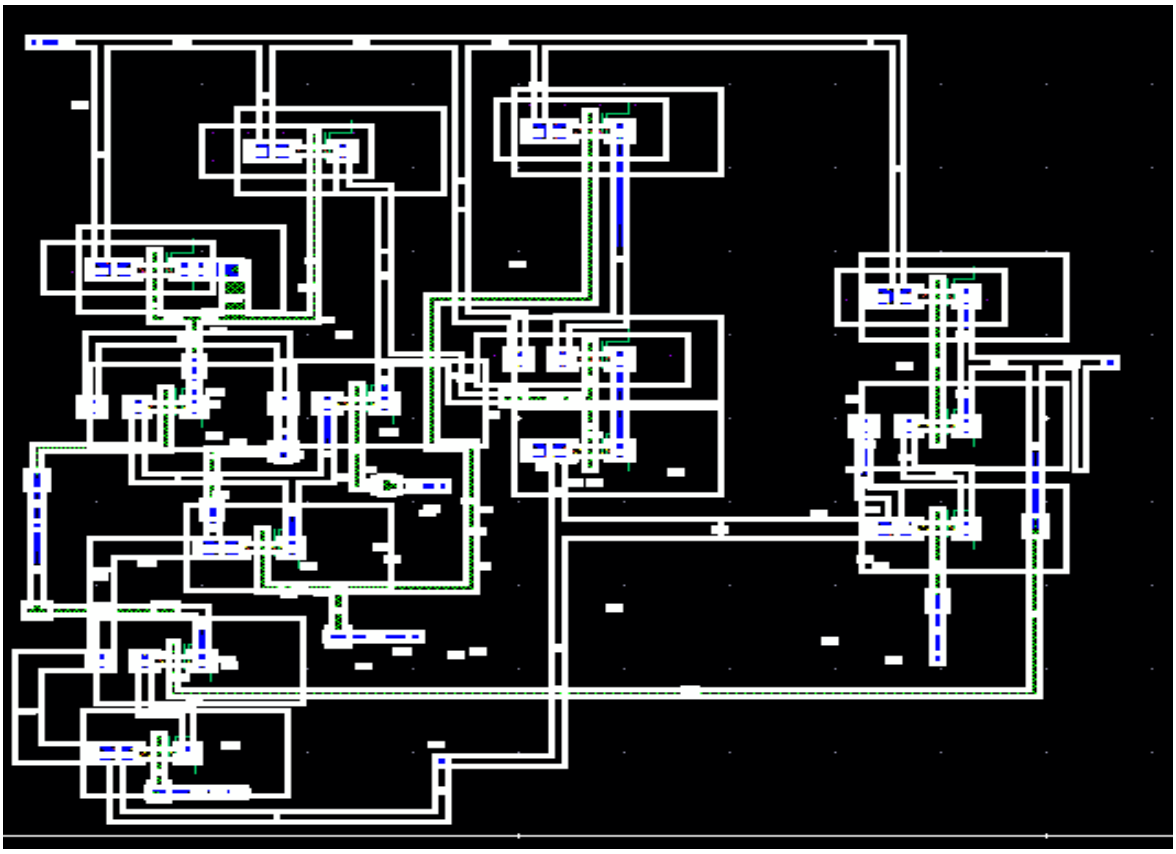

Figure 4.10 : Analog av_extracted view in 90nm

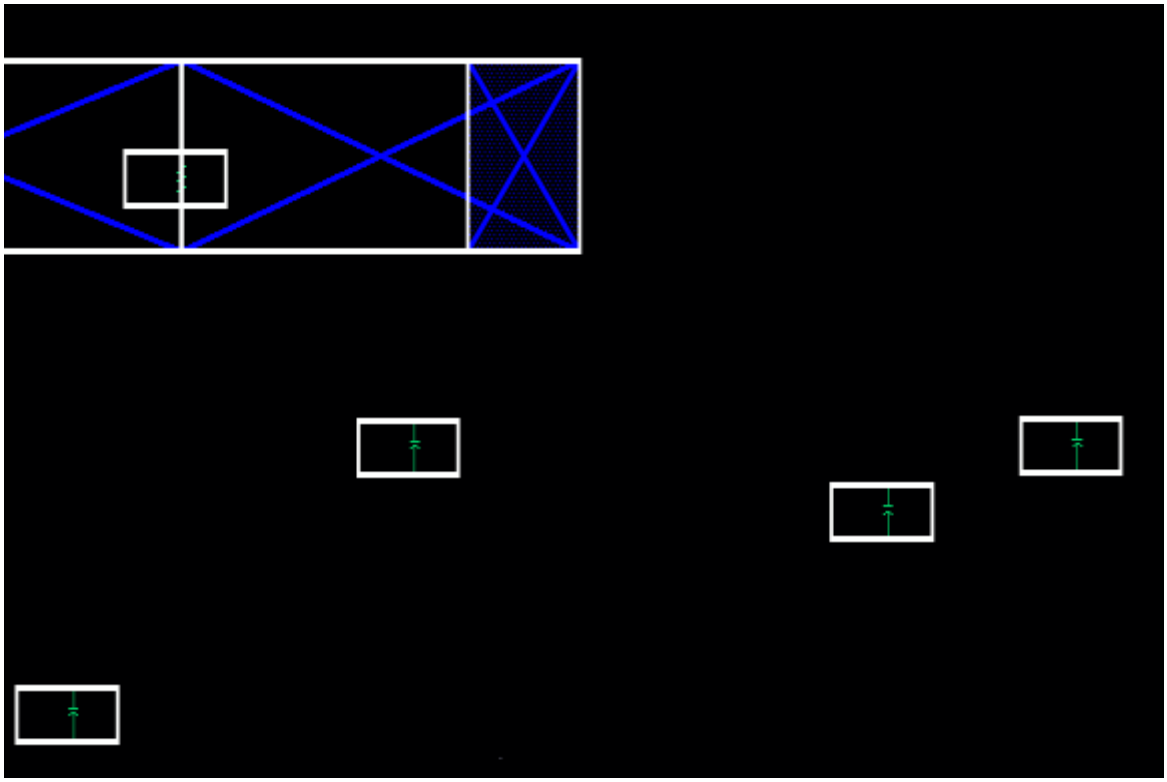

Figure 4.11 : Analog av_extracted capacitors and resistors view in 90nm

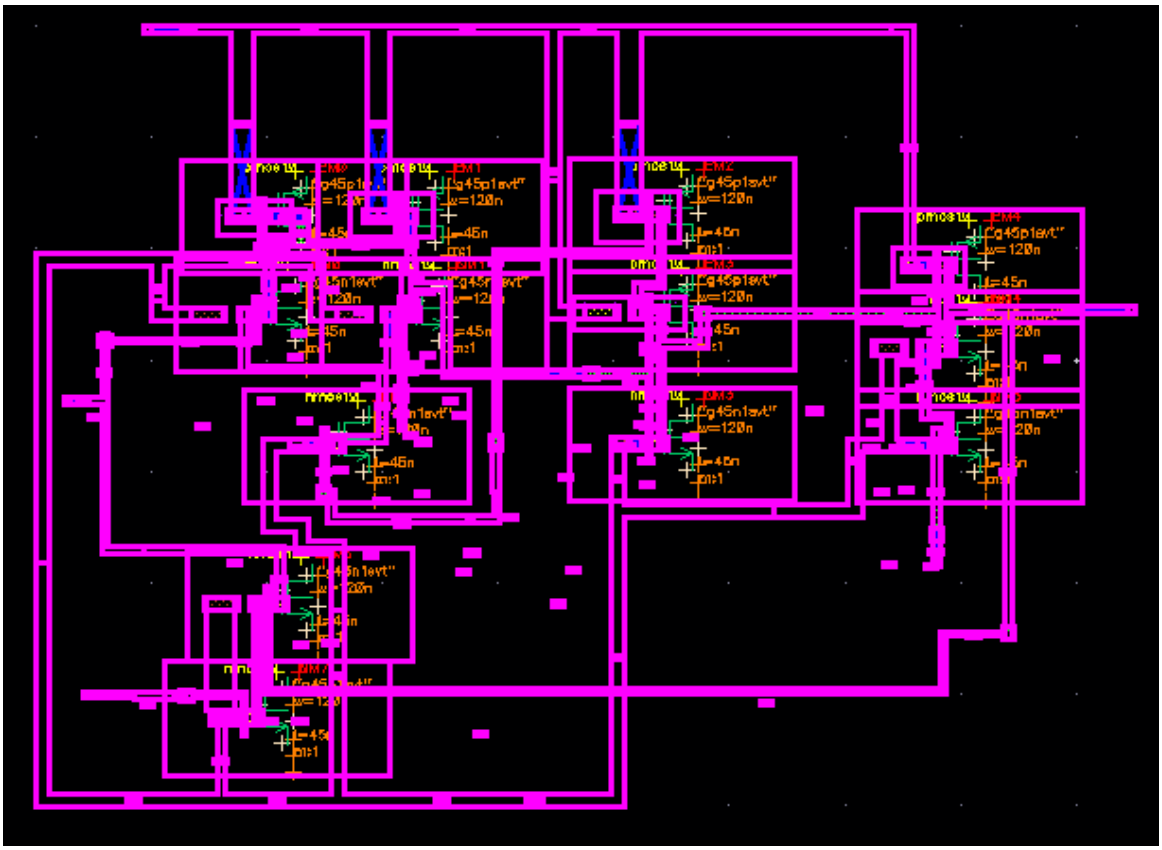

Figure 4.12 : Analog av_extracted view in 45nm

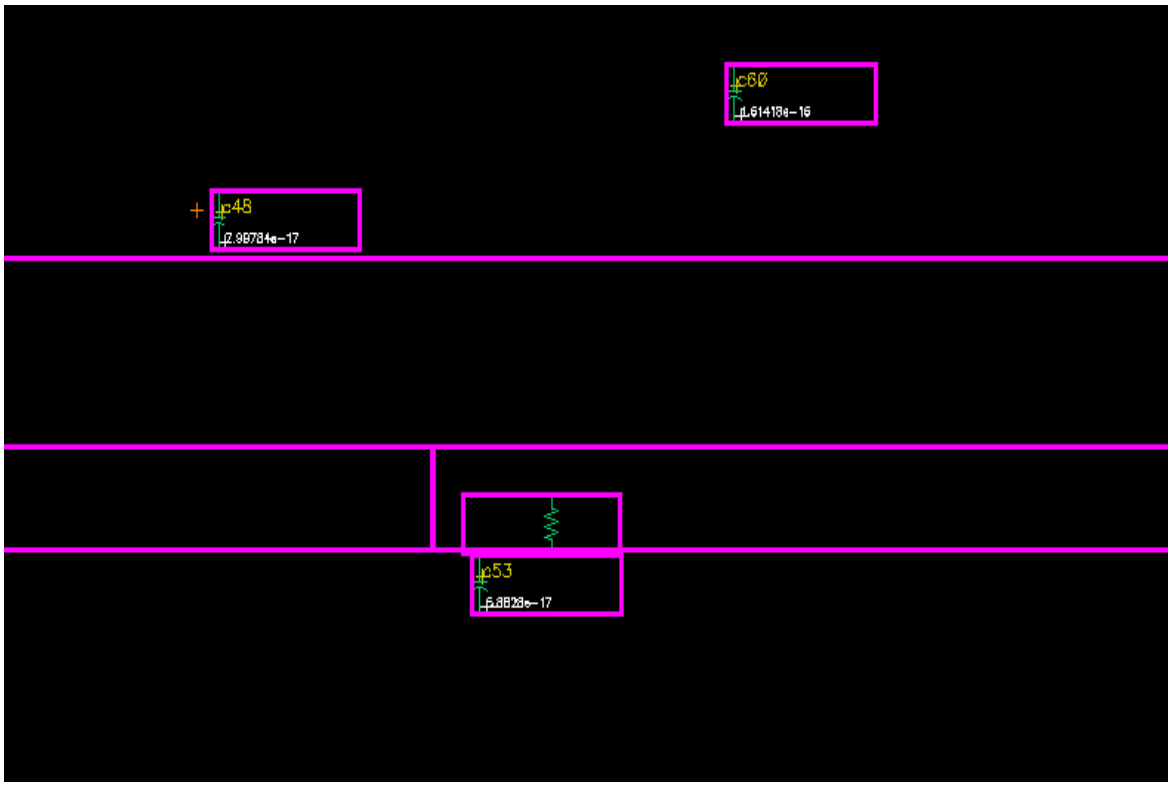

Figure 4.13 : Analog av_extracted capacitors and resistors view in 45nm

Table 4.1 : Comparison table of memristor as synapse between two neuron in 90 nm and 45 nm technology.

Parameter	90 nm	45 nm
Current (I)	8 nA	2 pA
Vdd	1.2 v	500 mV
Power	604.7 μW	11.74 nW
Energy	823 nJ	244.3 fJ

Results of comparison between 90 nm and 45 nm CMOS technology implementations underscore the major effect of scaling technology in terms of energy efficiency of the interconnection of triple memristor-based neurons as shown in table 4.1 . In this regard, the two-neuron network integrated using 90 nm technology consumed around 604.7 μW of energy in its triple memristor synapse circuit, which takes into account the increased leakage and dynamic powers in the circuit due to large feature sizes. The 45 nm technology consumed an ultra-low power of 11.74 nW.

This further supports the scaling advantage with much lower energy per spike in the 45 nm design as compared to the 90 nm design. The lower operating voltage and reduced device sizes in the 45 nm process cause lower storage and switching energies in both the neuron and synaptic blocks. In spite of this extreme reduction in both power and energy, the functionality of the neuronal synaptic system did not change and the generation of spikes and the transmission of weighted signals were observed to occur correctly in the 45 nm and 90 nm processes.

In particular, this comparison not only proves that the suggested two-memristor synapse architecture scales favorably with advances in technological node size, but it also shows that it has strong potential for neuromorphic computing when operating in an ultra-low-power regime. While it has been clearly demonstrated that it can function efficiently using a 90 nm node size, it was also proven to be operational when using a node size of 45 nm.

CHAPTER 5

DELIVERABLES , IMPACT AND APPLICATIONS

5.1 Deliverables

- Customized model of memristor :

A complete working model of a memristor was developed in Verilog-A to simulate synaptic functionality in neuromorphic chips. The model describes non-volatile storage of conductance and dynamic weight updates. The model was compiled and available in Cadence Virtuoso in a revivable symbol format. Therefore, it can be easily connected with a CMOS neuron circuit without any trouble. A symbolic model promotes a modular design.

- Optimized CMOS Neuron simulation :

The spiking neuron circuit simulation was conducted with a goal of replicating biologically inspired integrate-and-fire neuron behavior. Major functions in a neuron include integration in the membrane, threshold identification, spike firing, and neuron reset. Additionally, simulation parameters were optimized with a focus on both static and dynamic power. The spiking operations in a neuron were ensured to be stable despite using low-voltage technology.

- Architecture of Triple-Memristor :

A triple memristor synaptic device was proposed and linked between two neurons. A higher resolution on effective weights can be obtained by using multiple memristors. Additionally, this promotes stronger robustness to variations in device characteristics and nonideal switching. The total conductance is used to represent the synaptic weight. Such a device provides better robustness than a single memristor device.

- Two-Neuron communication through memristive synapse :

Functional spike communication between two neurons was achieved. Pre-synaptic spikes are transmitted through the memristive synapse. The memristive synapse transduces voltage spikes into weighted synaptic currents. The synaptic currents excite the post-synaptic neuron. Firing of the post-neuron is a function of the strength of synaptic weights.

- STDP learning circuit implementation :

A learning block based on STDP in an on-chip implementation in analog circuit elements. The learning circuit consists of transconductance stages, switch transistors, and latch elements. The circuit is able to detect relative spike times of pre- and post-synaptic neurons. Based on these

relative times, potentiation or depression is performed. The learning process is purely hardware-driven.

- Ultra-Low Power Achievement (11.74 nW) :

The neuron-synapse combination achieved a power consumption of approximately 11.74 nW. This is inclusive of operations in a neuron and interaction in a memristor synapse. Energy efficiency has been attained through analog computation and non-volatile storage. Event-driven processing avoidedswitching. Validation for an always-on application is an affirmation of a major project milestone.

- Pre-Layout Physical Design :

The neuron layouts were drawn using Cadence Virtuoso Layout Suite. The designs adhered to normalized matching and routing rules. Every attempt was made to keep parasitic effects to a minimum. The designs were taped out in both 45 nm and 90 nm technology nodes. Aiming for physical realizability. Connects schematic design with silicon implementation.

- Verification and Extraction After Layout :

Complete post-layout verification was performed using standard industry tools. DRC check ensured conformity with fabrication rules. LVS check validated conformity with the schematic and layout. Quantus tool performed parasitic extraction. av_extracted simulations proved post-layout functionality.

5.2 Impact

- Supports Ultra Low Power Neuromorphic

The project shows how neuron/synapse systems can be achieved with power consumption in the nanowatt scale. The energy problem of AI hardware can thus be solved. Such a project makes it possible to work in low-power environments. Continuous operation is now possible. Battery life is greatly increased.

- Connecting Biology and Silicon

Biologically inspired spiking and learning functions were integrated into CMOS technology. This integrates neuroscience ideas with VLSI circuit design. Learning functions are achieved at a circuit level. The approach is more biologically inspired than digital AI when considering neural processing. The work promotes research in biologically inspired computing.

- Improves Synaptic Weight Resolution

The precision of effective weights can be enhanced by using three memristors. A small conductance mismatch can be averaged out. Therefore, learning will become more stable. Moreover, updating weights will become accurate.

- Enables On-Chip Learning

The learning in STDP takes place in hardware. No separate processor or software is necessary for this learning. It is an autonomous learning system. Real-time learning is possible because of this learning technique. Lifelong learning is also possible with this technique.

- Improves Scalability over Technology Nodes

Validation in 45 nm and 90 nm thus verifies scalability. A design is not fixed on a particular technology node. Designers can pick and choose based on cost considerations or availability. The performance trend continues to be linear. Hence, this improves usability. It facilitates technology migration.

- Enables Always-On Intelligence

Ultra-low power consumption makes it possible to operate uninterruptedly. The systems can continue operating without utilizing any power. Such is perfect for sensing and/or monitoring operations. No latency in "waking up" is observed. Intellect functionality is available all the time. Such an attribute suits edge AI.

5.3 Applications

- Always-On Edge AI Sensors

The ultra-low-power neuron/synapse mesh provides a continuous sensing and processing capability on the edge. A nanowatt power budget enables devices to stay on without constant recharging. Event-driven spiking activity engages computations only when relevant signals are detected. On-hub STDP can facilitate dynamic learning over time. Such a platform is highly suitable for usage in surveillance and safety sensors and cloud connectivity is not necessarily a requirement.

- Intelligent IoT Nodes

The memristor synapses allow learning to be performed locally in individual IoT devices. The neuron circuit functions in an efficient manner when operating with temporal sensor inputs. STDP learning facilitates adaptive behavior in IoT devices in response to environmental modifications. Energy efficiency adds to the benefit of durability.

- Wearable Health Monitoring Devices

The 11.74 nW operating power consumption promotes a longer lifespan for batteries in wearable technology. The spiking neuron model can handle biological signals such as ECG, EEG, and movement information. Event-driven computation avoids redundant calculations. Self-learning capabilities adjust for personalized trends.

- Implantable Biomedical

Biologically accurate models of a neuron and STDP learning rules work very well in simulating biological neurons. Ultra-low power consumption leads to lower tissue warming and smaller batteries. Adaptive signal processing using memristive synaptic devices is possible. The model can be used in neural prosthetics or implants. Continuous learning capabilities improve performance over a lifetime.

- Event-Based Vision Sensors

The spiking neurons can work with asynchronous spikes in an efficient manner rather than using complete frames. As a result, this will eliminate redundancy and reduce power consumption. With memristive synapses, correlations in both space and time can be achieved. STDP learning can be used for adaptive learning of features.

- Autonomous Robots

On-chip learning facilitates behavioral adaptation in real time. Spiking computation leads to low-energy consumption during idle phases. Memristor-enabled synapses support local storage of learned behavior. STDP learning supports learning from feedback. Suitable for navigation systems, obstacle avoidance systems, and motor control systems.

- Brain-Machine Interfaces

The neuron/memristor network can be easily integrated with neural signals. The spiking activity corresponds to natural communication signals. STDP learning rules allow for adaptive encoding and/or decoding of neural signals. Ultra-low power consumption is an important requirement for implanting BMI systems. Learning capabilities can improve the processing of signals with time.

- Smart Surveillance Systems

Event-driven spiking enables identification of abnormally behaving inputs without processing videos. Power consumption is very low when idle. Learned normal behavior maps are stored through memristive synapses. STDP learning rules allow adaptive threat identification. False alarm generation is prevented. Battery-powered surveillance motes can make use of it.

- Environmental Monitoring Systems

Sensing in the system continues in an uninterrupted manner for temperature, gas, pollution, or vibration. Energy consumption is very low because of event-driven processing. Environment analysis is accomplished using learning functions within a chip. Learned information from environments is conserved using memristors.

- Neuromorphic system

The design can serve as a learning accelerator in conjunction with digital processors. The design relieves CPU processors of adaptive and temporal computations. Non-volatile storage of weights is offered by memristive synapses. STDP supports learning without retraining in devices. Power savings correlate with performance gains at a system level. Hybrids can be used in AI technology.

- Edge Intelligence for Smart Cities

Sensing nodes can autonomously learn local patterns. Event-driven processing minimizes communications. Ultra-low power consumption supports massive deployments. STDP learns to adjust for time-varying urban environments. Use cases include traffic analysis, luminaires, and infrastructure analysis. Improves smart city efficiency.

- Adaptive Signal Processing Systems

Spiking neurons can handle time-dependent signals very efficiently. Temporal correlations are coded in memristive synapses. STDP learning rules support adaptive filtering or pattern recognition. Suitable for audio signals, vibration analysis, or radar signals. Energy efficiency is achieved by event processing.

- Low Power Pattern Recognition

Memristor based synapses allow efficient learning of patterns. STDP learns spatiotemporal features based on samples. Energy consumption is minimal in event computation. Can be used for gesture, motion, and anomaly detection. No separate training hardware is required. Suitable for constant recognition systems.

- Security & Intrusion Detection

The spiking neuron model is efficient in identifying unusual temporal patterns. The learning capability facilitates modifications in dealing with dynamic threats. The event-driven model favors less overhead in surveillance. Ultra-low power consumption enables constant surveillance. The memristive synapses store learned intruder signatures. Suits embedded security systems.

- Distributed Sensor Networks

Every sensor node is processing/learning local information in an autonomous manner. Compute

driven by events reduces network traffic. Ultra-low power consumption leads to dense sensor node deployment. Use of memristive synapses facilitates local knowledge storage. STDP rules allow self-adaptivity. Suitable for large scale sensor network systems.

- Edge-Based Speech & Audio Recognition

Spiking neurons are efficient in processing temporal audio features. STDP trains phoneme and sound pattern recognition. Event-driven processing minimizes continuous computations. Memristor devices can store learned maps. Power efficiency promotes always-listening systems. Suitable for voice-controlled systems.

- Neuromorphic Research & Education Platforms

Offers a full learning system validated with hardware. Implements neuron models, memristor devices, STDP algorithms, and layouts. Offers hands-on education in neuroscience. Facilitates experimental research using physical circuits. Makes research practical with physical circuits.

CONCLUSION AND FUTURE SCOPE

Conclusion

A model is successfully established for simulating, designing, and verifying an energy-efficient neuromorphic processing module with an analog spiking neuron cell with memristor synapses and self-learning functionality. A biologically accurate integrate-and-fire neuron model is simulated and optimized for a stable spiking cycle with ultra-low power operations. The neuron model accurately models a biological neural spike in an integrate-and-fire manner, providing a sound platform for designing a neuromorphic system. One of the major contributions of this research work is to design a Verilog-A model of a custom memristor accurately simulating non-volatile resistive-switching characteristics critical for synaptic weight storage. Moreover, to improve synaptic ruggedness and weighted resolution, a triple memristor synapse design involving two neurons was used.

Additionally, simulation studies have successfully demonstrated efficient weighted spike transfer, device variability insusceptibility, and reliable intercommunication among two neurons. The learning function of the system was proven by incorporating STDP into the system. The learning circuit allowed successful potentiation and depression of synapses based on the relative time of pre- and post synapses, which adheres to a biological learning law. Controlled and stable modifications in the weights of synapses were achieved without any degradation in a series of learning sessions, thus making learning in an analog neuromorphic circuit feasible. Physical design verification with complete implementation in both 45 nm and 90 nm CMOS technology proved to be a critical step. DRC and LVS checks demonstrated the accuracy of the design, and parasitic analysis in quantus allowed for accurate post-layout simulation using the av_extracted view and configuration. Even when parasitic effects were accounted for, both the neuron function and learning function were observed to be robust in behavior.

In summary, ultra-low power performance with a consumption of approximately 11.74 nW in the triple-memristor synapse enabled the neuron, synapse, and learning system to be highly suitable for always-on systems. The project offers an end-to-end platform for designing a neuromorphic system, right from modeling and simulation to learning validation and post-layout verification, which forms a good basis for designing a scalable spiking neural network. The work presented is an added increment towards building an adaptive and energy-efficient neuromorphic system for edge intelligence.

Future Scope

The neuromorphic neuron-synapse architecture presented here has a bright future for scaling up into large spiking neural networks. By linking various neurons via memristor-based synapse connections, it is possible to scale up the architecture into more complex tasks like spatiotemporal pattern recognition or decision-making. In this work, the triple-memristor synapse architecture presented here is a reliable stepping stone towards scaling up the synapse connections since it not only enhances weight stability but also alleviates the sensitivity associated with memristor variations. Other advanced learning algorithms like higher order STDP or plasticity based on rewards should also be integrated.

Technologically speaking, the design can easily be scaled down to more advanced CMOS technology nodes and even paired with the latest non-volatile memory technologies for even lower power and greater densities of integration. The ultra-low power exhibited by the project will enable the system to be applied effectively in the real world for always-on edge intelligence applications such as wearables and implants for biomedical sensing and autonomous sensing. Future work will involve the implementation of the neuromorphic system and filling the reality gap that still exists between modeling and simulation implementation of the design.

REFERENCES

[1]. Sasi Kiran Suddarsi, Sandeep Moparthi, Gopikant Kumar, Harika Ganta, Saranya Sri Peddapudi, Harshitha Goru, Gopi Krishna Saramekala , " Implementation and Analysis of Axon Hillock Neuron Circuits using 28 nm FD-SOI MOSFET:Original Design and Modifications". https://doi.org/10.1007/s10470-025-02464-3, 2025.

[2]. A. Dabbagh et al., "CDMAC: Mixed-signal binary/ternary in-memory computing accelerator for power-constrained multiply-and-accumulate (MAC) processing," Journal of Supercomputing, vol. 81, no. 1, p. 190, 2025.

[3]. M. Karamimanesh et al., "Spiking neural networks on field-programmable gate array (FPGA): A survey of methodologies and recent advancements," Neural Networks, vol. 186, p. 107256, 2025.

[4]. Sahibia Kaur Vohra, Sherin A. Thomas, Mahendra Sakare, Devarshi Mrinal Das , "Circuit Implementation of On-Chip Trainable Spiking Neural Network using CMOS-Based Memristive STDP Synapses and LIF Neurons". https://doi.org/10.1016/j.vlsi.2023.102122, 2024.

[5]. F. Aguirre et al., "Hardware implementation of memristor-based artificial neural networks," Nature Communications, vol. 15, no. 1, p. 1974, 2024.

[6]. J. Kim et al., "Design of a 180-nm complementary metal-oxide semiconductor (CMOS) neuron circuit with soft-reset and underflow allowing for loss-less hardware spiking neural networks," Advanced Intelligent Systems, vol. 6, no. 1, p. 2300460, 2024.

[7]. J. E. Pedersen et al., "Neuromorphic intermediate representation: A unified instruction set for interoperable brain-inspired computing," Nature Communications, vol. 15, no. 1, p. 8122, 2024.

[8] J. Ko et al., "SNN sim: Investigation and optimization of large-scale analog spiking neural networks based on flash memory devices," Advanced Intelligent Systems, vol. 6, no. 4, p. 2300456, 2024.

[9]. J. K. Eshraghian et al., "Training spiking neural networks using lessons from deep learning," Proceedings of the IEEE, vol. 111, no. 9, pp. 1016–1054, 2023.

[10]. S. Wang et al., "Memristor-based intelligent human-like neural computing," Advanced Electronic Materials, vol. 9, no. 1, p. 2200877, 2023.